The Grand Reserve

925 Grand Boulevard
Kansas City, MO 64198

CONSTRUCTION DOCUMENTS - GARAGE MAINTENANCE
May 3, 2019

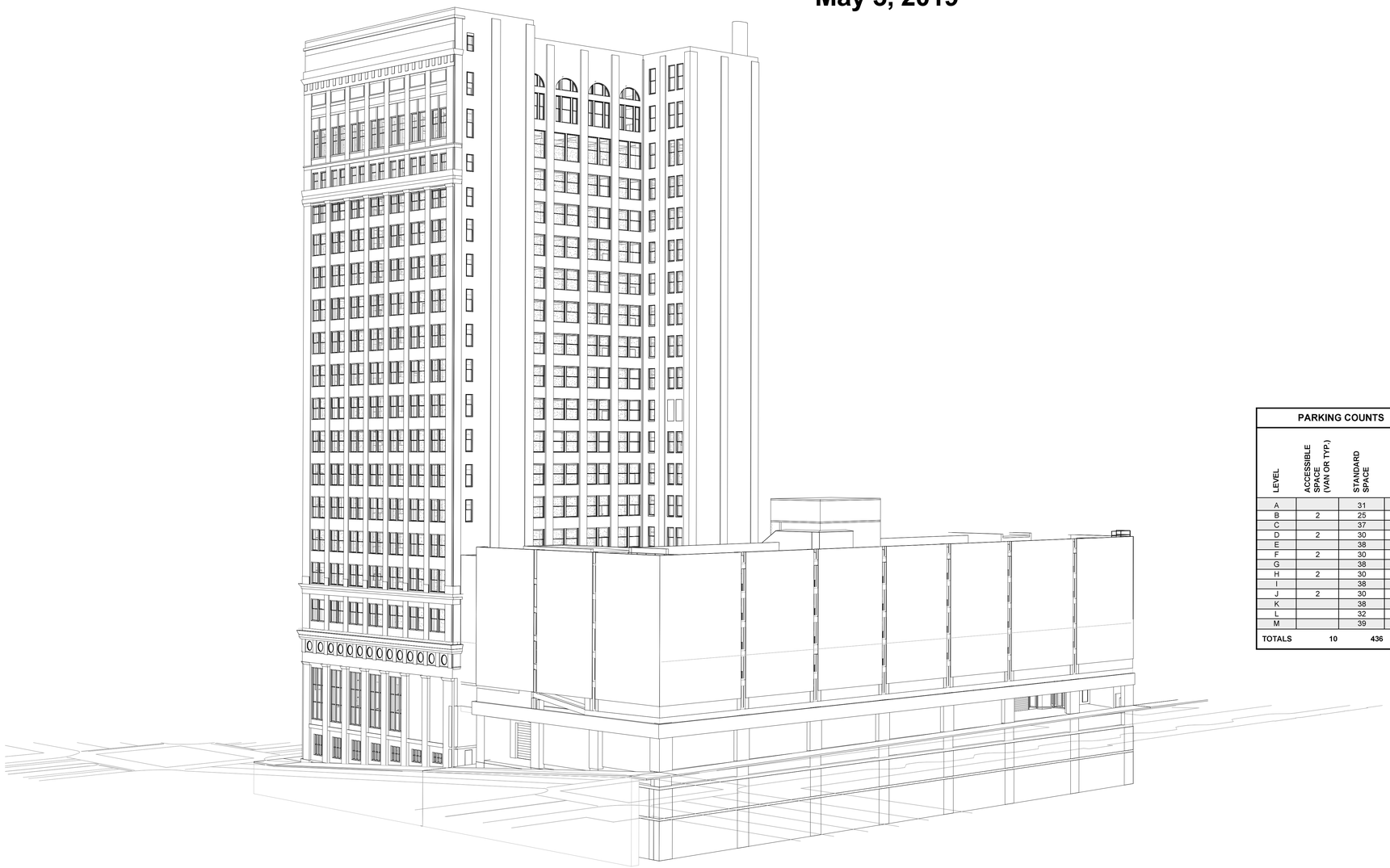

GARAGE SHEET INDEX

Sheet Number	Sheet Name	90% Review (10-1-18)	100% CD (05-03-19)
09 - ARCHITECTURAL			
0.0	Garage - Cover Sheet	X	X
A1.04G	Garage - Levels A & B	X	X
A1.05G	Garage - Levels C & D	X	X
A1.06G	Garage - Levels E & F	X	X
A1.07G	Garage - Levels G & H	X	X
A1.08G	Garage - Levels I & J	X	X
A1.09G	Garage - Levels K & L	X	X
A1.10G	Garage - Levels M & PH	X	X
A5.01G	Garage - Misc. Details		X
A8.01G	Garage - Door Details	X	X
MEP0.1G	Garage - MEPFP Scope Narrative		X

PARKING COUNTS

LEVEL	ACCESSIBLE SPACE (VAN OR TYP.)	STANDARD SPACE	TOTAL EACH FLOOR
A		31	**31**
B	2	25	**27**
C		37	**37**
D	2	30	**32**
E		38	**38**
F	2	30	**32**
G		38	**38**
H	2	30	**32**
I		38	**38**
J	2	30	**32**
K		38	**38**
L		32	**32**
M		39	**39**
TOTALS	**10**	**436**	**446**

PARKING REQUIREMENTS

Total Number of Parking Spaces in Parking Facility (Lot or Garage)	Minimum Total Number of Accessible Parking Spaces Required	Minimum Number of Van Accessible Parking Spaces (Included in total req.)
1-25	1	1
26 - 50	2	1
51 - 75	3	1
76 - 100	4	1
101 - 150	5	1
151 - 200	6	1
201 - 300	7	2
301 - 400	8	2
401 - 500	9	2
501 - 1000	2% of total	
1001 and over	20, plus 1 for each 100, or fraction there-of, over 1000	

BROWNING DAY MULLINS DIERDORF
LEADERSHIP + DESIGN®

Architecture
Landscape Architecture
Planning
Interior Design

626 North Illinois Street
Indianapolis, Indiana 46204
(317) 635-5030
www.bdmd.com

Delta Quad Holdings, LLC
Owner
Street Number and Name
City, State and Zip
(317) ABC-DEFG
www.website.com

Construction Manager
Rau Construction Co.
9101 West 110th Street, Suite 150
Overland Park, Kansas 66210
Phone: (913) 642-6000
www.website.com

Structural Engineering
Structural Engineer's Name
Street Number and Name
City, State and Zip
(317) ABC-DEFG
www.website.com

MEP Engineering
MEP Engineer's Name
Street Number and Name
City, State and Zip
(317) ABC-DEFG
www.website.com

Civil Engineering
Civil Engineer's Name
Street Number and Name
City, State and Zip
(317) ABC-DEFG
www.website.com

GENERAL NOTES - TYPICAL ALL FLOORS

1. REPAIR OR REPLACE COPING STONE TO MATCH BALANCE.
2. REPLACE ALL FIRE EXTINGUISHER CABINETS AND EXTINGUISHERS W/ NEW. SHEET NOTE 'FEC'.
3. ALL PIPING TO BE CLEANED AND PAINTED.
4. CLEAN, REPAIR AND PAINT ALL BOLLARDS AND OTHER EXISTING GUARDS.
5. CLEAN, REPAIR AND PAINT ALL PARTIAL AND FULL HEIGHT WALLS AND COLUMNS COMPLETELY, LEVELS 'A' THROUGH 'K'. CLEAN AND PATCH CONCRETE WALLS ON LEVELS 'L' & 'M'.
6. CLEAN, REPAIR AND PAINT ALL CEILINGS AND BEAMS COMPLETELY.
7. CLEAN, REPAIR AND PAINT ALL CONDUIT TO REMAIN.
8. REPLACE LIGHTING THROUGHOUT W/ NEW L.E.D. TYPE FIXTURES. PROVIDE NEW CIRCUITRY AND CONTROLS AS REQUIRED FOR PROPER OPERATION. COVERAGE OF NEW LIGHTING SHALL INCLUDE ALL PARKING AND DRIVE AREAS (W/ EXCEPTION OF LIGHTING REQ. BY CODE, TOP DECK SHALL REMAIN UNLIT), ALONG W/ ALL STORAGE AND ANCILLARY SPACE. ELECTRICAL CONTRACTOR TO PROPOSE FIXTURE TYPES.
9. PROVIDE NEW L.E.D. LIGHT FIXTURES W/ INTEGRAL EMERGENCY LIGHTING AND INTEGRAL MOTION DETECTORS THROUGHOUT STAIRWELLS.
10. VERIFY W/ OWNER/ USER GROUP REQUIREMENTS OF AUDIO & SECURITY SYSTEMS THROUGHOUT.
11. CLEAN AND REPAIR EXISTING SPRINKLER SYSTEM. REPLACE PIPING. MAIN RISER DRY SYSTEM VALVES TO BE REPLACED.
12. REPLACE ALL 'EXIT' SIGNAGE. INSTALL NEW FIXTURES W/ L.E.D. LAMPING. PROVIDE BATTERY BACK-UP AS REQUIRED TO MEET CODE REQUIREMENTS.
13. PROVIDE NEW EMERGENCY LIGHT FIXTURES IN LOCATIONS REQUIRED. FIXTURES TO HAVE L.E.D. LAMPS.
14. PAINT LOW HANGING PIPING AS REQUIRED BY CODE. (LOW CLEARANCE)
15. EVALUATE DETERIORATING BEAM CONDITIONS. EVALUATION / RECOMMENDATIONS TO BE PRESENTED TO OWNERSHIP FOR REVIEW AND ACTION. REPAIR TO BE ESTABLISHED AS RESULT OF REPORT.
16. MEPFP CONTRACTORS TO PROVIDE COMPLETE SET OF PERMIT DRAWINGS AS PART OF DESIGN / BUILD SCOPE OF WORK.
17. CLEAN, REPAIR, & PAINT ELEVATOR DOORS & FRAMES, EACH LEVEL. PROVIDE NEW, UPDATED CAB FINISHES - FLOOR, WALLS, CEILING (PANELS AND LIGHTING). FINISHES TO BE SELECTED FROM INDUSTRY STANDARD MATERIALS.
18. PROVIDE PAINT SCHEME FOR WAYFINDING SIGNAGE, VARYING COLORS FOR LEVELS 'A' THROUGH 'K'. SIMILAR TO CURRENT COLUMN LEVEL DESIGNATION AND RAMP-WALL DIRECTIONAL ARROWS/LEVEL MARKERS. COLORS TO BE SELECTED BY ARCHITECT.
19. CEILING INSULATION PANELS TO BE REMOVED AS THEY OCCUR, ALL LEVELS.
20. EVALUATIONS WERE MADE FROM A VISUAL OBSERVATIONS. STRUCTURE BEAMS, COLUMNS AND SLABS TO BE EVALUATED BY A STRUCTURAL ENGINEER.
21. SLAB JOINT RUNNING EAST WEST AT COLUMN LINE 7 SHOWS SIGNS OF FAILURE ON SEVERAL LEVELS. EVALUATE DETERIORATING BEAM AND CONDITIONS. VALUATION / RECOMMENDATIONS TO BE PRESENTED TO OWNERSHIP FOR REVIEW AND ACTION. REPAIR TO BE ESTABLISHED AS RESULT OF REPORT.

GARAGE PLAN KEY NOTES

ITEM	NOTE
1	EVALUATE HOLES AND OTHER DAMAGE TO PARKING DECKS AND PROVIDE APPROPRIATE REPAIR. SEE STRUCT. ENGINEERS COMMENTS.
2	REMOVE AND REPLACE EXISTING ROOFING MEMBRANE W/ BITUMEN WATERPROOFING SYSTEM, INCLUDING ALL CURBS.
3	CLEAN AND PAINT GUARDRAIL ASSEMBLY. REPAIR AND REPLACE AS REQUIRED.
4	REPAIR AND REPLACE SEALANT AROUND STACKS.
5	REMOVE EXISTING METAL PANEL WALLS AND ROOF SYSTEM. REPLACE WITH NEW, SIMLAR, METAL PANEL SYSTEM
6	REMOVE DAMAGED AREA OF CURB. REPLACE WITH NEW.
7	REMOVE EXISTING PARKING DECK WATERPROOFING AS REQUIRED TO ALLOW PAVEMENT REPAIR / REPLACEMENT/ RESURFACE.
8	PAINT NEW PARKING STRIPES, CURBS, DIRECTIONAL ARROWS AND RESTRICTED PATTERNS AT EACH LEVEL.
9	REMOVE ITEMS NO LONGER IN SERVICE, COMPLETELY. REPAIR AREAS TO MATCH ADJACENT SURFACES.
10	VERIFY DRAIN SYSTEM IS IN WORKING ORDER. PROVIDE WATER JET CLEANING FOR ENTIRE STORM DRAINAGE SYSTEM. REPAIR OR REPLACE ANY DAMAGED DRAINS OR DRAIN COVERS.
11	REMOVE EXISTING METAL SIDING AND ASSOCIATED ITEMS COMPLETELY. PATCH/REPAIR CONCRETE AS NEEDED.
12	REMOVE AND REPLACE EXISTING DAMPER. EXISTING LOUVER TO REMAIN, CLEAN AND PAINT.
13	EVALUATE ROOF CONDITION. REPLACE / REPAIR AS REQUIRED WITH MEMBRANE SYSTEM.

GARAGE PLAN KEY NOTES

ITEM	NOTE
14	REPLACE LIGHT FIXTURES W/ NEW.
15	EVALUATE EXISTING HANDRAILINGS. PROVIDE OPTIONS TO REMAIN, REPLACE, OR AMEND TO MEET CODE.
16	REPLACE DOOR FRAME, LEAF AND HARDWARE IN THEIR ENTIRETY. NEW HARDWARE TO MATCH EXISTING IN FUNCTION.
17	INSTALL LADDER SECURITY DOOR.
18	REPLACE/ INSTALL COMPLIANT HANDRAILS.
19	REPAIR OR REPLACE EXISTING CEILING & WALL MOUNTED POWERED WAYFINDING SIGNAGE THROUGHOUT.
20	REPLACE EXPANSION JOINT MATERIAL. EVALUATE CONDITION OF METAL TRACKS AS EXISTS. REPLACE AS REQUIRE.
21	REMOVE O.H. DOOR, TRACK AND ASSOCIATED ITEMS COMPLETELY. REPAIR/PATCH CONCRETE AS NEEDED.
22	REMOVE EXISTING RAILS. REPLACE W/ NEW TO MEET CODE. SEE DETAIL 1/A5.01
23	PROVIDE GUARDRAILING BETWEEN LEVELS. SEE DETAIL 2/A5.01
24	PROVIDE BALANCE DAMPER BEHIND ALL EXHAUST GRILLES TO ALLOW FOR EQUAL BALANCING OF EXHAUST LEVELS. CLEAN & PAINT GRILLE ASSEMBLY OR REPLACE AS NEEDED.
25	REPLACE EXHAUST FAN SERVING ELECTRICAL SWITCHGEAR ROOM. PROVIDE NEW IN-LINE FAN SIZED FOR 1,500 CFM.
26	PROVIDE NEW HANDICAP PARKING SIGNAGE 60" ABOVE PARKING AREA. SEE DETAIL 3/A5.01
27	REMOVE EXISTING ACCESSIBILITY SIGNAGE.
28	CLEAN AND PAINT MECHANICAL CURBS, SUPPORTS, AND UNITS TO REMAIN.
29	REPLACE EXISTING EXPANSION COVER. EVALUATE EXPANSION MATERIAL. REPLACE AS REQUIRED.

GARAGE PLAN KEY NOTES

ITEM	NOTE
30	REMOVE ALL EXISTING STEAM RADIATORS AND REPLACE W/ 5KW ELECTRIC HEATER @ BOTTOM LEVEL.
31	EXISTING COOLANT LINES SERVING EMEGENCY GENERATORS TO REMAIN.
32	EXISTING PANELS TO REMAIN TO SERVE NEW AND EXISTING LIGHTING AND EQUIPMENT. PROVIDE BID ALTERNATE PRICING TO REPLACE PANELS AND FEEDERS IN THEIR ENTIRETY BACK TO DISTRIBUTION PANELS.
34	REMOVE OR ABANDON IN PLACE EXISTING FANS PREVIOUSLY SERVING THE PAINT BOOTH.
35	EXISTING AIR-COOLED CONDENSING UNITS SERVINIG EMERGENCY GENERATORS TO REMAIN. CONTRACTOR TO INCLUDE BID ALTERNATE PRICING TO REPAIR UNITS TO BRING INTO FULL WORKING ORDER.
36	REMOVE EXISTING UNIT HEATER AND COOLING UNIT. REPLACE BOTH WITH NEW.
37	REPLACE EXISTING EXHAUST FAN W/ NEW 27,500 CFM FAN. PROVIDE ADAPTER CURB AS REQ. VERIFY ELECTRICAL & RECONNECT TO NEW FAN
38	MEP CONTRACTORS TO COORDINATE WITH GENERAL CONTRACTOR TO MEET ALL CODE REQUIREMENTS FOR NEW OR REFURBISHED ELEVATOR EQUIPMENT. THIS SHALL INCLUDE EQUIPMENT POWER FEEDERS, ALONG WITH ANY REQUIREMENTS TO PROVIDE CODE COMPLIANT SHAFT, INCLUDING EXHAUST FAN, SUMP PUMP, LIGHTING AND MISCELLANEOUS POWER REQUIREMENTS.

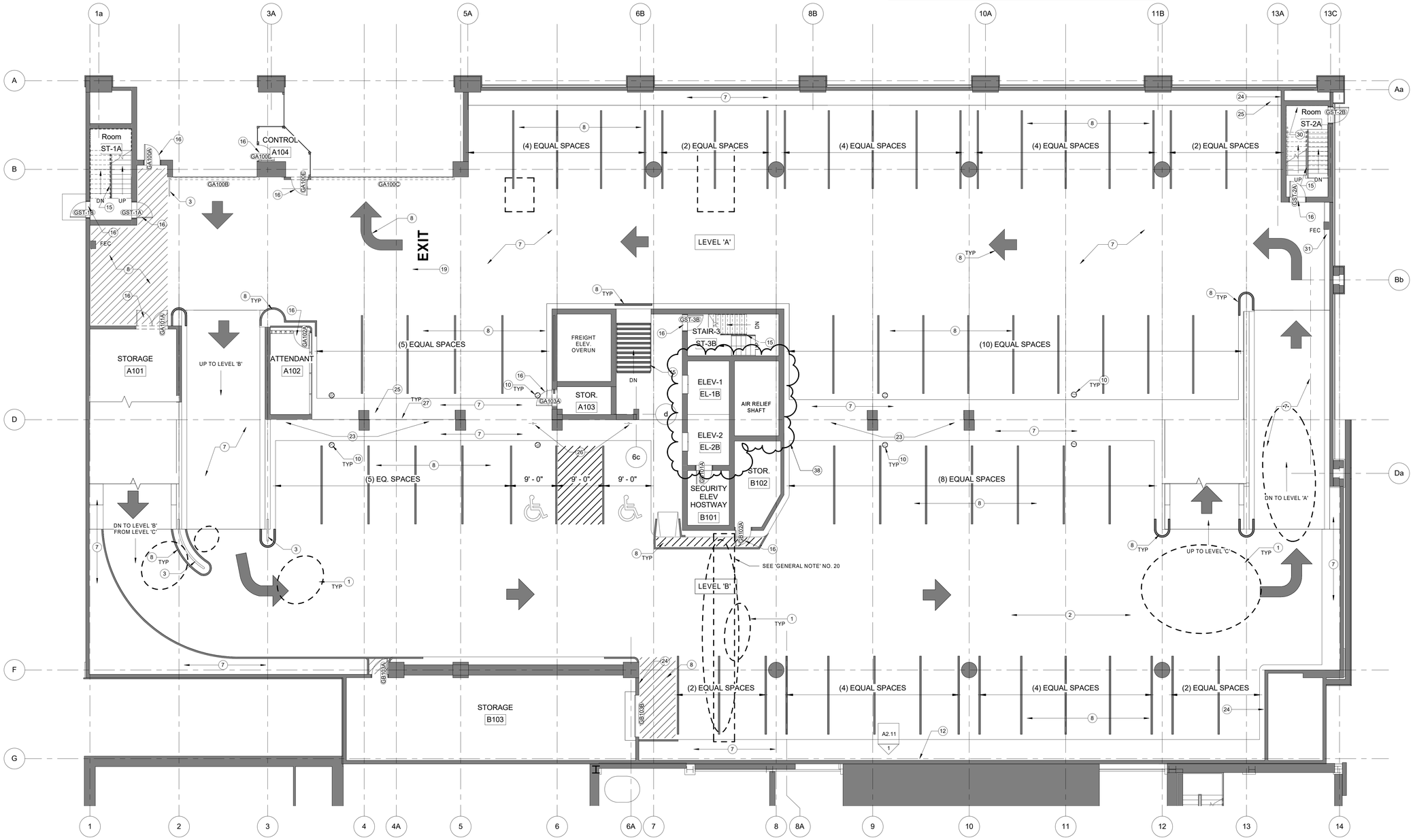

1 A1.04G Garage - Levels A & B

1/8" = 1'-0"

BROWNING DAY MULLINS DIERDORF
LEADERSHIP + DESIGN®

Browning Day Mullins Dierdorf Architects
Architecture
Landscape Architecture
Planning
Interior Design
626 North Illinois Street
Indianapolis, Indiana 46204
Phone: (317) 635-5030
Website: www.bdmd.com

Delta Quad Holdings, LLC
Owner

Rau Construction Co.
Construction Manager
9101 West 110th Street, Suite 150
Overland Park, Kansas 66210
Phone: (913) 642-6000
Website: www.website.com

Lawson Elser, Inc.
Structural Engineer
650 East Carmel Drive, Suite 150
Carmel, Indiana 46032
Phone: (317) 574-5409
Website: www.lawsonelser.com

Hoss & Brown Engineers, Inc.
MEP Engineer
11205 West 79th Street, Suite 102
Lenexa, Kansas 66214
Phone: (913) 362-9090
Website: www.h-be.com

SK Design Group, Inc.
Civil Engineer
4600 College Boulevard, Suite 100
Overland Park, KS 66211
Phone: (913) 451-1818
Website: www.skdesigngroup.net

Matchline Design Group, LLC
Interior Design
10300 North Central Expressway, Suite 335
Dallas, TX 75231
Phone: (972) 707-0568
Website: www.matchlinedesign.com

GREGORY E. JACOB REGISTERED No. AR00860208 STATE OF INDIANA ARCHITECT

CERTIFICATION

Construction Documents
Garage Maintenance

The Grand Reserve

925 Grand Boulevard
Kansas City, MO 64198

Project No.: 18A023
Drawn By: Author
Checked By: Checker
Scale: See Drawing
Issue Date: May 3, 2019

REVISION SCHEDULE		
Rev. #	Revision Description	Issue Date
1		

Garage - Levels A & B

A1.04G

\\xd-uem01\UserShare\fram\Documents\18A023_K.C.Embassy Suites_Garage_R17_jfram.rvt

5/10/2019 11:24:15 AM

GENERAL NOTES - TYPICAL ALL FLOORS

1. REPAIR OR REPLACE COPING STONE TO MATCH BALANCE.
2. REPLACE ALL FIRE EXTINGUISHER CABINETS AND EXTINGUISHERS W/ NEW. SHEET NOTE 'FEC'.
3. ALL PIPING TO BE CLEANED AND PAINTED.
4. CLEAN, REPAIR AND PAINT ALL BOLLARDS AND OTHER EXISTING GUARDS.
5. CLEAN, REPAIR AND PAINT ALL PARTIAL AND FULL HEIGHT WALLS AND COLUMNS COMPLETELY, LEVELS 'A' THROUGH 'K'. CLEAN AND PATCH CONCRETE WALLS ON LEVELS 'L' & 'M'.
6. CLEAN, REPAIR AND PAINT ALL CEILINGS AND BEAMS COMPLETELY.
7. CLEAN, REPAIR AND PAINT ALL CONDUIT TO REMAIN.
8. REPLACE LIGHTING THROUGHOUT W/ NEW L.E.D. TYPE FIXTURES. PROVIDE NEW CIRCUITRY AND CONTROLS AS REQUIRED FOR PROPER OPERATION. COVERAGE OF NEW LIGHTING SHALL INCLUDE ALL PARKING AND DRIVE AREAS (W/ EXCEPTION OF LIGHTING REQ. BY CODE, TOP DECK SHALL REMAIN UNLIT), ALONG W/ ALL STORAGE AND ANCILLARY SPACE. ELECTRICAL CONTRACTOR TO PROPOSE FIXTURE TYPES.
9. PROVIDE NEW L.E.D. LIGHT FIXTURES W/ INTEGRAL EMERGENCY LIGHTING AND INTEGRAL MOTION DETECTORS THROUGHOUT STAIRWELLS.
10. VERIFY W/ OWNER/ USER GROUP REQUIREMENTS OF AUDIO & SECURITY SYSTEMS THROUGHOUT.
11. CLEAN AND REPAIR EXISTING SPRINKLER SYSTEM. REPLACE PIPING. MAIN RISER DRY SYSTEM VALVES TO BE REPLACED.
12. REPLACE ALL 'EXIT' SIGNAGE. INSTALL NEW FIXTURES W/ L.E.D. LAMPING. PROVIDE BATTERY BACK-UP AS REQUIRED TO MEET CODE REQUIREMENTS.
13. PROVIDE NEW EMERGENCY LIGHT FIXTURES IN LOCATIONS REQUIRED. FIXTURES TO HAVE L.E.D. LAMPS.
14. PAINT LOW HANGING PIPING AS REQUIRED BY CODE. (LOW CLEARANCE)
15. EVALUATE DETERIORATING BEAM CONDITIONS. EVALUATION / RECOMMENDATIONS TO BE PRESENTED TO OWNERSHIP FOR REVIEW AND ACTION. REPAIR TO BE ESTABLISHED AS RESULT OF REPORT.
16. MEPFP CONTRACTORS TO PROVIDE COMPLETE SET OF PERMIT DRAWINGS AS PART OF DESIGN / BUILD SCOPE OF WORK.
17. CLEAN, REPAIR, & PAINT ELEVATOR DOORS & FRAMES, EACH LEVEL. PROVIDE NEW, UPDATED CAB FINISHES - FLOOR, WALLS, CEILING (PANELS AND LIGHTING). FINISHES TO BE SELECTED FROM INDUSTRY STANDARD MATERIALS.
18. PROVIDE PAINT SCHEME FOR WAYFINDING SIGNAGE, VARYING COLORS FOR LEVELS 'A' THROUGH 'K'. SIMILAR TO CURRENT COLUMN LEVEL DESIGNATION AND RAMP-WALL DIRECTIONAL ARROWS/LEVEL MARKERS. COLORS TO BE SELECTED BY ARCHITECT.
19. CEILING INSULATION PANELS TO BE REMOVED AS THEY OCCUR, ALL LEVELS.
20. EVALUATIONS WERE MADE FROM A VISUAL OBSERVATIONS. STRUCTURE BEAMS, COLUMNS AND SLABS TO BE EVALUATED BY A STRUCTURAL ENGINEER.
21. SLAB JOINT RUNNING EAST WEST AT COLUMN LINE 7 SHOWS SIGNS OF FAILURE ON SEVERAL LEVELS. EVALUATE DETERIORATING BEAM AND CONDITIONS. VALUATION / RECOMMENDATIONS TO BE PRESENTED TO OWNERSHIP FOR REVIEW AND ACTION. REPAIR TO BE ESTABLISHED AS RESULT OF REPORT.

GARAGE PLAN KEY NOTES

ITEM	NOTE
1	EVALUATE HOLES AND OTHER DAMAGE TO PARKING DECKS AND PROVIDE APPROPRIATE REPAIR. SEE STRUCT. ENGINEERS COMMENTS.
2	REMOVE AND REPLACE EXISTING ROOFING MEMBRANE W/ BITUMEN WATERPROOFING SYSTEM, INCLUDING ALL CURBS.
3	CLEAN AND PAINT GUARDRAIL ASSEMBLY. REPAIR AND REPLACE AS REQUIRED.
4	REPAIR AND REPLACE SEALANT AROUND STACKS.
5	REMOVE EXISTING METAL PANEL WALLS AND ROOF SYSTEM. REPLACE WITH NEW, SIMLAR, METAL PANEL SYSTEM
6	REMOVE DAMAGED AREA OF CURB. REPLACE WITH NEW.
7	REMOVE EXISTING PARKING DECK WATERPROOFING AS REQUIRED TO ALLOW PAVEMENT REPAIR / REPLACEMENT/ RESURFACE.
8	PAINT NEW PARKING STRIPES, CURBS, DIRECTIONAL ARROWS AND RESTRICTED PATTERNS AT EACH LEVEL.
9	REMOVE ITEMS NO LONGER IN SERVICE, COMPLETELY. REPAIR AREAS TO MATCH ADJACENT SURFACES.
10	VERIFY DRAIN SYSTEM IS IN WORKING ORDER. PROVIDE WATER JET CLEANING FOR ENTIRE STORM DRAINAGE SYSTEM. REPAIR OR REPLACE ANY DAMAGED DRAINS OR DRAIN COVERS.
11	REMOVE EXISTING METAL SIDING AND ASSOCIATED ITEMS COMPLETELY. PATCH/REPAIR CONCRETE AS NEEDED.
12	REMOVE AND REPLACE EXISTING DAMPER. EXISTING LOUVER TO REMAIN, CLEAN AND PAINT.
13	EVALUATE ROOF CONDITION. REPLACE / REPAIR AS REQUIRED WITH MEMBRANE SYSTEM.

GARAGE PLAN KEY NOTES

ITEM	NOTE
14	REPLACE LIGHT FIXTURES W/ NEW.
15	EVALUATE EXISTING HANDRAILINGS. PROVIDE OPTIONS TO REMAIN, REPLACE, OR AMEND TO MEET CODE.
16	REPLACE DOOR FRAME, LEAF AND HARDWARE IN THEIR ENTIRETY. NEW HARDWARE TO MATCH EXISTING IN FUNCTION.
17	INSTALL LADDER SECURITY DOOR.
18	REPLACE/ INSTALL COMPLIANT HANDRAILS.
19	REPAIR OR REPLACE EXISTING CEILING & WALL MOUNTED POWERED WAYFINDING SIGNAGE THROUGHOUT.
20	REPLACE EXPANSION JOINT MATERIAL. EVALUATE CONDITION OF METAL TRACKS AS EXISTS. REPLACE AS REQUIRE.
21	REMOVE O.H. DOOR, TRACK AND ASSOCIATED ITEMS COMPLETELY. REPAIR/PATCH CONCRETE AS NEEDED.
22	REMOVE EXISTING RAILS. REPLACE W/ NEW TO MEET CODE. SEE DETAIL 1/A5.01
23	PROVIDE GUARDRAILING BETWEEN LEVELS. SEE DETAIL 2/A5.01
24	PROVIDE BALANCE DAMPER BEHIND ALL EXHAUST GRILLES TO ALLOW FOR EQUAL BALANCING OF EXHAUST LEVELS. CLEAN & PAINT GRILLE ASSEMBLY OR REPLACE AS NEEDED.
25	REPLACE EXHAUST FAN SERVING ELECTRICAL SWITCHGEAR ROOM. PROVIDE NEW IN-LINE FAN SIZED FOR 1,500 CFM.
26	PROVIDE NEW HANDICAP PARKING SIGNAGE 60" ABOVE PARKING AREA. SEE DETAIL 3/A5.01
27	REMOVE EXISTING ACCESSIBILITY SIGNAGE.
28	CLEAN AND PAINT MECHANICAL CURBS, SUPPORTS, AND UNITS TO REMAIN.
29	REPLACE EXISTING EXPANSION COVER. EVALUATE EXPANSION MATERIAL. REPLACE AS REQUIRED.

GARAGE PLAN KEY NOTES

ITEM	NOTE
30	REMOVE ALL EXISTING STEAM RADIATORS AND REPLACE W/ 5KW ELECTRIC HEATER @ BOTTOM LEVEL.
31	EXISTING COOLANT LINES SERVING EMEGENCY GENERATORS TO REMAIN.
32	EXISTING PANELS TO REMAIN TO SERVE NEW AND EXISTING LIGHTING AND EQUIPMENT. PROVIDE BID ALTERNATE PRICING TO REPLACE PANELS AND FEEDERS IN THEIR ENTIRETY BACK TO DISTRIBUTION PANELS.
34	REMOVE OR ABANDON IN PLACE EXISTING FANS PREVIOUSLY SERVING THE PAINT BOOTH.
35	EXISTING AIR-COOLED CONDENSING UNITS SERVINIG EMERGENCY GENERATORS TO REMAIN. CONTRACTOR TO INCLUDE BID ALTERNATE PRICING TO REPAIR UNITS TO BRING INTO FULL WORKING ORDER.
36	REMOVE EXISTING UNIT HEATER AND COOLING UNIT. REPLACE BOTH WITH NEW.
37	REPLACE EXISTING EXHAUST FAN W/ NEW 27,500 CFM FAN. PROVIDE ADAPTER CURB AS REQ. VERIFY ELECTRICAL & RECONNECT TO NEW FAN
38	MEP CONTRACTORS TO COORDINATE WITH GENERAL CONTRACTOR TO MEET ALL CODE REQUIREMENTS FOR NEW OR REFURBISHED ELEVATOR EQUIPMENT. THIS SHALL INCLUDE EQUIPMENT POWER FEEDERS, ALONG WITH ANY REQUIREMENTS TO PROVIDE CODE COMPLIANT SHAFT, INCLUDING EXHAUST FAN, SUMP PUMP, LIGHTING AND MISCELLANEOUS POWER REQUIREMENTS.

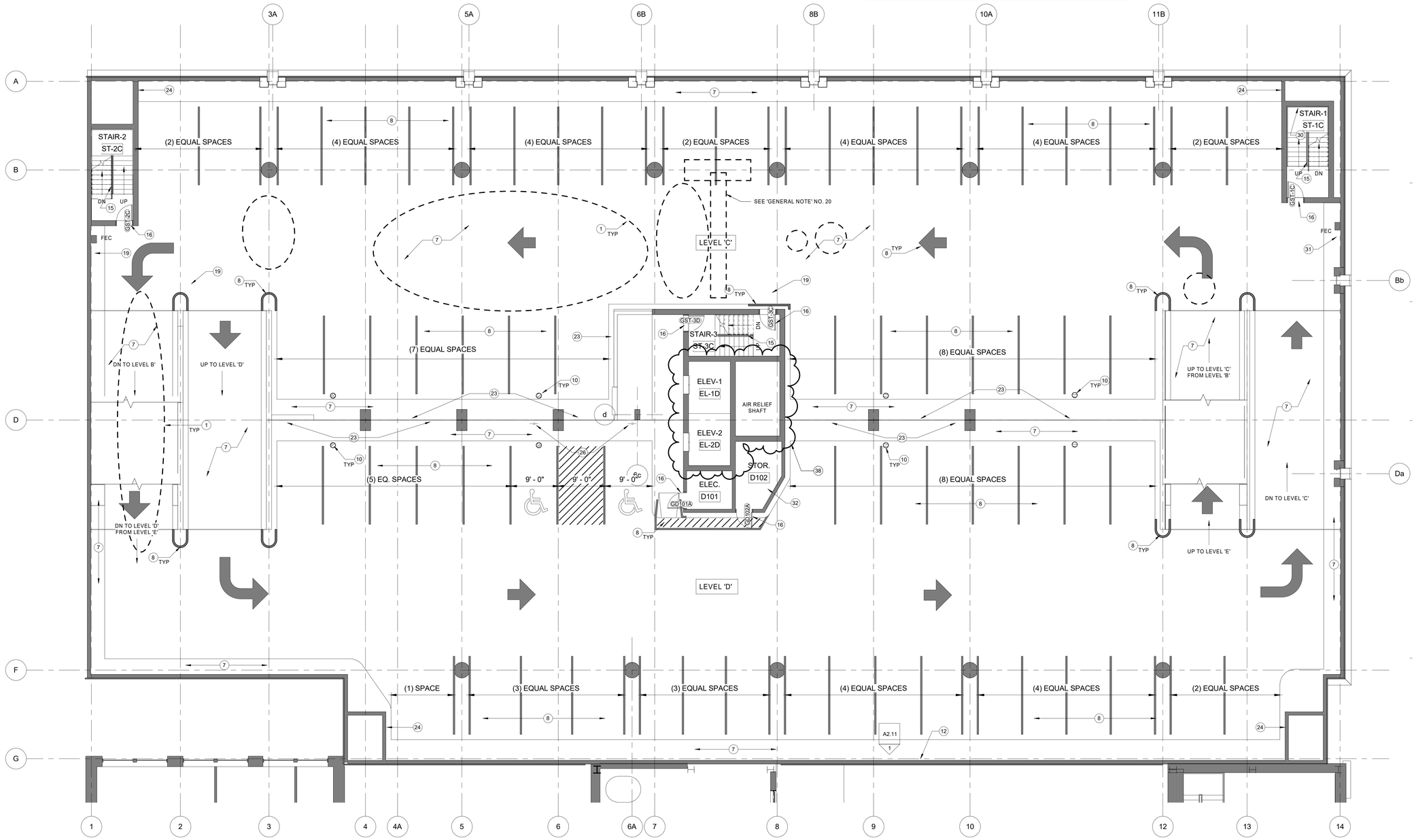

1 A1.05G Garage - Levels C & D
1/8" = 1'-0"

BROWNING DAY MULLINS DIERDORF
LEADERSHIP + DESIGN®

Browning Day Mullins Dierdorf Architects
Architecture
Landscape Architecture
Planning
Interior Design
626 North Illinois Street
Indianapolis, Indiana 46204
Phone: (317) 635-5030
Website: www.bdmd.com

Delta Quad Holdings, LLC
Owner

Rau Construction Co.
Construction Manager
9101 West 110th Street, Suite 150
Overland Park, Kansas 66210
Phone: (913) 642-6000
Website: www.website.com

Lawson Elser, Inc.
Structural Engineer
650 East Carmel Drive, Suite 150
Carmel, Indiana 46032
Phone: (317) 574-5409
Website: www.lawsonelser.com

Hoss & Brown Engineers, Inc.
MEP Engineer
11205 West 79th Street, Suite 102
Lenexa, Kansas 66214
Phone: (913) 362-9090
Website: www.h-be.com

SK Design Group, Inc.
Civil Engineer
4600 College Boulevard, Suite 100
Overland Park, KS 66211
Phone: (913) 451-1818
Website: www.skdesigngroup.net

Matchline Design Group, LLC
Interior Design
10300 North Central Expressway, Suite 335
Dallas, TX 75231
Phone: (972) 707-0568
Website: www.matchlinedesign.com

GREGORY E. JACOB REGISTERED No. AR00900208 STATE OF INDIANA ARCHITECT

CERTIFICATION

Construction Documents
Garage Maintenance

The Grand Reserve

925 Grand Boulevard
Kansas City, MO 64198

Project No.: 18A023
Drawn By: Author
Checked By: Checker
Scale: See Drawing
Issue Date: May 3, 2019

REVISION SCHEDULE		
Rev. #	Revision Description	Issue Date
1		

Garage - Levels C & D

A1.05G

\\cd-vem01\UserShare\jfram\Documents\18A023_K.C.Embassy Suites_Garage_R17_jfram.rvt

5/10/2019 11:24:19 AM

GENERAL NOTES - TYPICAL ALL FLOORS

1. REPAIR OR REPLACE COPING STONE TO MATCH BALANCE.
2. REPLACE ALL FIRE EXTINGUISHER CABINETS AND EXTINGUISHERS W/ NEW. SHEET NOTE 'FEC'.
3. ALL PIPING TO BE CLEANED AND PAINTED.
4. CLEAN, REPAIR AND PAINT ALL BOLLARDS AND OTHER EXISTING GUARDS.
5. CLEAN, REPAIR AND PAINT ALL PARTIAL AND FULL HEIGHT WALLS AND COLUMNS COMPLETELY, LEVELS 'A' THROUGH 'K'. CLEAN AND PATCH CONCRETE WALLS ON LEVELS 'L' & 'M'.
6. CLEAN, REPAIR AND PAINT ALL CEILINGS AND BEAMS COMPLETELY.
7. CLEAN, REPAIR AND PAINT ALL CONDUIT TO REMAIN.
8. REPLACE LIGHTING THROUGHOUT W/ NEW L.E.D. TYPE FIXTURES. PROVIDE NEW CIRCUITRY AND CONTROLS AS REQUIRED FOR PROPER OPERATION. COVERAGE OF NEW LIGHTING SHALL INCLUDE ALL PARKING AND DRIVE AREAS (W/ EXCEPTION OF LIGHTING REQ. BY CODE, TOP DECK SHALL REMAIN UNLIT), ALONG W/ ALL STORAGE AND ANCILLARY SPACE. ELECTRICAL CONTRACTOR TO PROPOSE FIXTURE TYPES.
9. PROVIDE NEW L.E.D. LIGHT FIXTURES W/ INTEGRAL EMERGENCY LIGHTING AND INTEGRAL MOTION DETECTORS THROUGHOUT STAIRWELLS.
10. VERIFY W/ OWNER/ USER GROUP REQUIREMENTS OF AUDIO & SECURITY SYSTEMS THROUGHOUT.
11. CLEAN AND REPAIR EXISTING SPRINKLER SYSTEM. REPLACE PIPING. MAIN RISER DRY SYSTEM VALVES TO BE REPLACED.
12. REPLACE ALL 'EXIT' SIGNAGE. INSTALL NEW FIXTURES W/ L.E.D. LAMPING. PROVIDE BATTERY BACK-UP AS REQUIRED TO MEET CODE REQUIREMENTS.
13. PROVIDE NEW EMERGENCY LIGHT FIXTURES IN LOCATIONS REQUIRED. FIXTURES TO HAVE L.E.D. LAMPS.
14. PAINT LOW HANGING PIPING AS REQUIRED BY CODE. (LOW CLEARANCE)
15. EVALUATE DETERIORATING BEAM CONDITIONS. EVALUATION / RECOMMENDATIONS TO BE PRESENTED TO OWNERSHIP FOR REVIEW AND ACTION. REPAIR TO BE ESTABLISHED AS RESULT OF REPORT.
16. MEPFP CONTRACTORS TO PROVIDE COMPLETE SET OF PERMIT DRAWINGS AS PART OF DESIGN / BUILD SCOPE OF WORK.
17. CLEAN, REPAIR, & PAINT ELEVATOR DOORS & FRAMES, EACH LEVEL. PROVIDE NEW, UPDATED CAB FINISHES - FLOOR, WALLS, CEILING (PANELS AND LIGHTING). FINISHES TO BE SELECTED FROM INDUSTRY STANDARD MATERIALS.
18. PROVIDE PAINT SCHEME FOR WAYFINDING SIGNAGE, VARYING COLORS FOR LEVELS 'A' THROUGH 'K'. SIMILAR TO CURRENT COLUMN LEVEL DESIGNATION AND RAMP-WALL DIRECTIONAL ARROWS/LEVEL MARKERS. COLORS TO BE SELECTED BY ARCHITECT.
19. CEILING INSULATION PANELS TO BE REMOVED AS THEY OCCUR, ALL LEVELS.
20. EVALUATIONS WERE MADE FROM A VISUAL OBSERVATIONS. STRUCTURE BEAMS, COLUMNS AND SLABS TO BE EVALUATED BY A STRUCTURAL ENGINEER.
21. SLAB JOINT RUNNING EAST WEST AT COLUMN LINE 7 SHOWS SIGNS OF FAILURE ON SEVERAL LEVELS. EVALUATE DETERIORATING BEAM AND CONDITIONS. VALUATION / RECOMMENDATIONS TO BE PRESENTED TO OWNERSHIP FOR REVIEW AND ACTION. REPAIR TO BE ESTABLISHED AS RESULT OF REPORT.

GARAGE PLAN KEY NOTES

ITEM	NOTE
1	EVALUATE HOLES AND OTHER DAMAGE TO PARKING DECKS AND PROVIDE APPROPRIATE REPAIR. SEE STRUCT. ENGINEERS COMMENTS.
2	REMOVE AND REPLACE EXISTING ROOFING MEMBRANE W/ BITUMEN WATERPROOFING SYSTEM, INCLUDING ALL CURBS.
3	CLEAN AND PAINT GUARDRAIL ASSEMBLY. REPAIR AND REPLACE AS REQUIRED.
4	REPAIR AND REPLACE SEALANT AROUND STACKS.
5	REMOVE EXISTING METAL PANEL WALLS AND ROOF SYSTEM. REPLACE WITH NEW, SIMLAR, METAL PANEL SYSTEM
6	REMOVE DAMAGED AREA OF CURB. REPLACE WITH NEW.
7	REMOVE EXISTING PARKING DECK WATERPROOFING AS REQUIRED TO ALLOW PAVEMENT REPAIR / REPLACEMENT/ RESURFACE.
8	PAINT NEW PARKING STRIPES, CURBS, DIRECTIONAL ARROWS AND RESTRICTED PATTERNS AT EACH LEVEL.
9	REMOVE ITEMS NO LONGER IN SERVICE, COMPLETELY. REPAIR AREAS TO MATCH ADJACENT SURFACES.
10	VERIFY DRAIN SYSTEM IS IN WORKING ORDER. PROVIDE WATER JET CLEANING FOR ENTIRE STORM DRAINAGE SYSTEM. REPAIR OR REPLACE ANY DAMAGED DRAINS OR DRAIN COVERS.
11	REMOVE EXISTING METAL SIDING AND ASSOCIATED ITEMS COMPLETELY. PATCH/REPAIR CONCRETE AS NEEDED.
12	REMOVE AND REPLACE EXISTING DAMPER. EXISTING LOUVER TO REMAIN, CLEAN AND PAINT.
13	EVALUATE ROOF CONDITION. REPLACE / REPAIR AS REQUIRED WITH MEMBRANE SYSTEM.

GARAGE PLAN KEY NOTES

ITEM	NOTE
14	REPLACE LIGHT FIXTURES W/ NEW.
15	EVALUATE EXISTING HANDRAILINGS. PROVIDE OPTIONS TO REMAIN, REPLACE, OR AMEND TO MEET CODE.
16	REPLACE DOOR FRAME, LEAF AND HARDWARE IN THEIR ENTIRETY. NEW HARDWARE TO MATCH EXISTING IN FUNCTION.
17	INSTALL LADDER SECURITY DOOR.
18	REPLACE/ INSTALL COMPLIANT HANDRAILS.
19	REPAIR OR REPLACE EXISTING CEILING & WALL MOUNTED POWERED WAYFINDING SIGNAGE THROUGHOUT.
20	REPLACE EXPANSION JOINT MATERIAL. EVALUATE CONDITION OF METAL TRACKS AS EXISTS. REPLACE AS REQUIRE.
21	REMOVE O.H. DOOR, TRACK AND ASSOCIATED ITEMS COMPLETELY. REPAIR/PATCH CONCRETE AS NEEDED.
22	REMOVE EXISTING RAILS. REPLACE W/ NEW TO MEET CODE. SEE DETAIL 1/A5.01
23	PROVIDE GUARDRAILING BETWEEN LEVELS. SEE DETAIL 2/A5.01
24	PROVIDE BALANCE DAMPER BEHIND ALL EXHAUST GRILLES TO ALLOW FOR EQUAL BALANCING OF EXHAUST LEVELS. CLEAN & PAINT GRILLE ASSEMBLY OR REPLACE AS NEEDED.
25	REPLACE EXHAUST FAN SERVING ELECTRICAL SWITCHGEAR ROOM. PROVIDE NEW IN-LINE FAN SIZED FOR 1,500 CFM.
26	PROVIDE NEW HANDICAP PARKING SIGNAGE 60" ABOVE PARKING AREA. SEE DETAIL 3/A5.01
27	REMOVE EXISTING ACCESSIBILITY SIGNAGE.
28	CLEAN AND PAINT MECHANICAL CURBS, SUPPORTS, AND UNITS TO REMAIN.
29	REPLACE EXISTING EXPANSION COVER. EVALUATE EXPANSION MATERIAL. REPLACE AS REQUIRED.

GARAGE PLAN KEY NOTES

ITEM	NOTE
30	REMOVE ALL EXISTING STEAM RADIATORS AND REPLACE W/ 5KW ELECTRIC HEATER @ BOTTOM LEVEL.
31	EXISTING COOLANT LINES SERVING EMEGENCY GENERATORS TO REMAIN.
32	EXISTING PANELS TO REMAIN TO SERVE NEW AND EXISTING LIGHTING AND EQUIPMENT. PROVIDE BID ALTERNATE PRICING TO REPLACE PANELS AND FEEDERS IN THEIR ENTIRETY BACK TO DISTRIBUTION PANELS.
34	REMOVE OR ABANDON IN PLACE EXISTING FANS PREVIOUSLY SERVING THE PAINT BOOTH.
35	EXISTING AIR-COOLED CONDENSING UNITS SERVINIG EMERGENCY GENERATORS TO REMAIN. CONTRACTOR TO INCLUDE BID ALTERNATE PRICING TO REPAIR UNITS TO BRING INTO FULL WORKING ORDER.
36	REMOVE EXISTING UNIT HEATER AND COOLING UNIT. REPLACE BOTH WITH NEW.
37	REPLACE EXISTING EXHAUST FAN W/ NEW 27,500 CFM FAN. PROVIDE ADAPTER CURB AS REQ. VERIFY ELECTRICAL & RECONNECT TO NEW FAN
38	MEP CONTRACTORS TO COORDINATE WITH GENERAL CONTRACTOR TO MEET ALL CODE REQUIREMENTS FOR NEW OR REFURBISHED ELEVATOR EQUIPMENT. THIS SHALL INCLUDE EQUIPMENT POWER FEEDERS, ALONG WITH ANY REQUIREMENTS TO PROVIDE CODE COMPLIANT SHAFT, INCLUDING EXHAUST FAN, SUMP PUMP, LIGHTING AND MISCELLANEOUS POWER REQUIREMENTS.

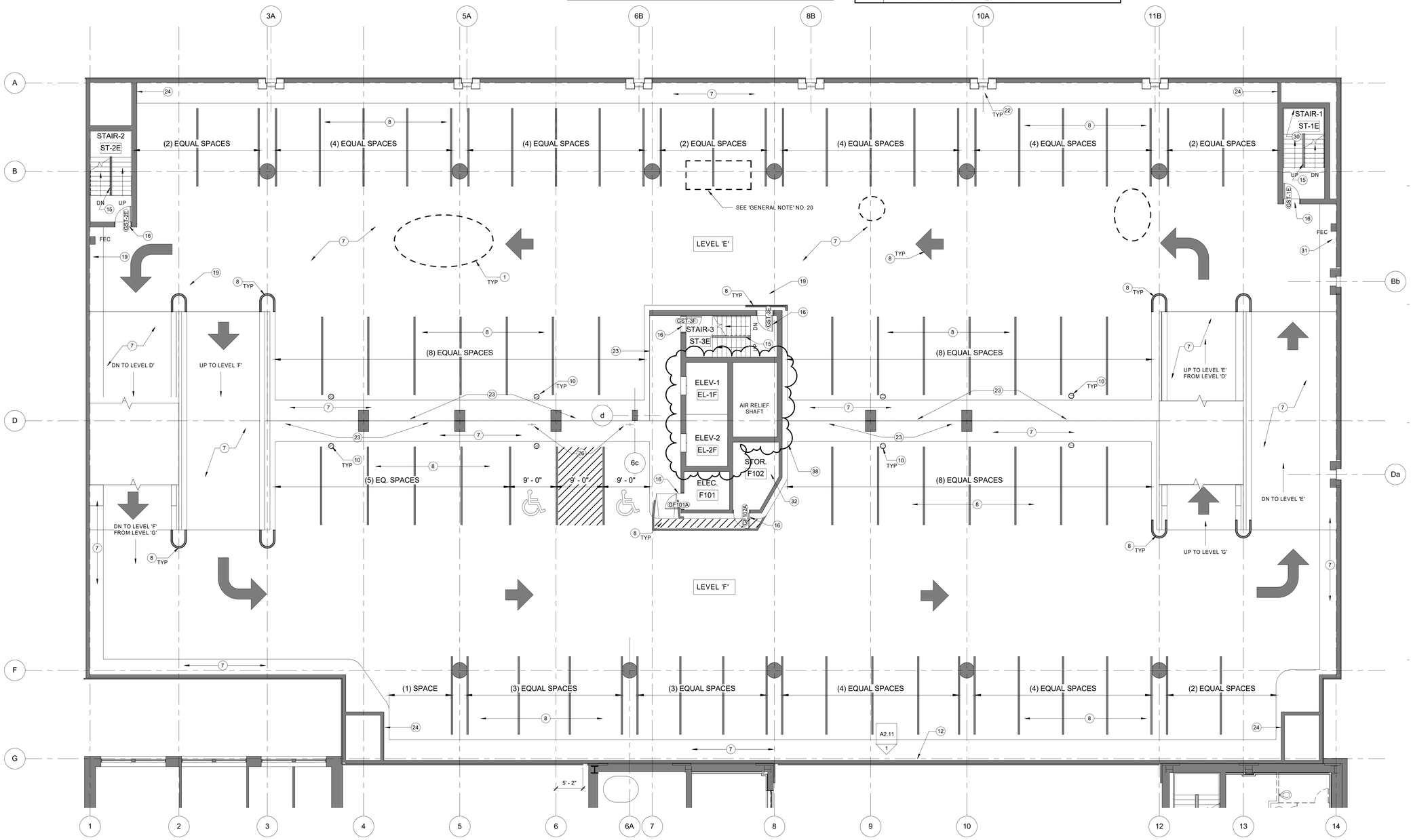

1 Garage - Levels E & F
A1.06G 1/8" = 1'-0"

BROWNING DAY MULLINS DIERDORF
LEADERSHIP + DESIGN®

Browning Day Mullins Dierdorf Architects
Architecture
Landscape Architecture
Planning
Interior Design
626 North Illinois Street
Indianapolis, Indiana 46204
Phone: (317) 635-5030
Website: www.bdmd.com

Delta Quad Holdings, LLC
Owner

Rau Construction Co.
Construction Manager
9101 West 110th Street, Suite 150
Overland Park, Kansas 66210
Phone: (913) 642-6000
Website: www.website.com

Lawson Elser, Inc.
Structural Engineer
650 East Carmel Drive, Suite 150
Carmel, Indiana 46032
Phone: (317) 574-5409
Website: www.lawsonelser.com

Hoss & Brown Engineers, Inc.
MEP Engineer
11205 West 79th Street, Suite 102
Lenexa, Kansas 66214
Phone: (913) 362-9090
Website: www.h-be.com

SK Design Group, Inc.
Civil Engineer
4600 College Boulevard, Suite 100
Overland Park, KS 66211
Phone: (913) 451-1818
Website: www.skdesigngroup.net

Matchline Design Group, LLC
Interior Design
10300 North Central Expressway, Suite 335
Dallas, TX 75231
Phone: (972) 707-0568
Website: www.matchlinedesign.com

GREGORY E. JACOB REGISTERED No. AR00860208 STATE OF INDIANA ARCHITECT

CERTIFICATION

Construction Documents
Garage Maintenance

The Grand Reserve

925 Grand Boulevard
Kansas City, MO 64198

Project No.: 18A023
Drawn By: Author
Checked By: Checker
Scale: See Drawing
Issue Date: May 3, 2019

REVISION SCHEDULE		
Rev. #	Revision Description	Issue Date
1		

Garage - Levels E & F

A1.06G

\\sd-vsem01\UserShare\fram\Documents\18A023_K.C.Embassy Suites_Garage_R17_jfram.rvt

5/10/2019 11:24:23 AM

GENERAL NOTES - TYPICAL ALL FLOORS

1. REPAIR OR REPLACE COPING STONE TO MATCH BALANCE.
2. REPLACE ALL FIRE EXTINGUISHER CABINETS AND EXTINGUISHERS W/ NEW. SHEET NOTE 'FEC'.
3. ALL PIPING TO BE CLEANED AND PAINTED.
4. CLEAN, REPAIR AND PAINT ALL BOLLARDS AND OTHER EXISTING GUARDS.
5. CLEAN, REPAIR AND PAINT ALL PARTIAL AND FULL HEIGHT WALLS AND COLUMNS COMPLETELY, LEVELS 'A' THROUGH 'K'. CLEAN AND PATCH CONCRETE WALLS ON LEVELS 'L' & 'M'.
6. CLEAN, REPAIR AND PAINT ALL CEILINGS AND BEAMS COMPLETELY.
7. CLEAN, REPAIR AND PAINT ALL CONDUIT TO REMAIN.
8. REPLACE LIGHTING THROUGHOUT W/ NEW L.E.D. TYPE FIXTURES. PROVIDE NEW CIRCUITRY AND CONTROLS AS REQUIRED FOR PROPER OPERATION. COVERAGE OF NEW LIGHTING SHALL INCLUDE ALL PARKING AND DRIVE AREAS (W/ EXCEPTION OF LIGHTING REQ. BY CODE, TOP DECK SHALL REMAIN UNLIT), ALONG W/ ALL STORAGE AND ANCILLARY SPACE. ELECTRICAL CONTRACTOR TO PROPOSE FIXTURE TYPES.
9. PROVIDE NEW L.E.D. LIGHT FIXTURES W/ INTEGRAL EMERGENCY LIGHTING AND INTEGRAL MOTION DETECTORS THROUGHOUT STAIRWELLS.
10. VERIFY W/ OWNER/ USER GROUP REQUIREMENTS OF AUDIO & SECURITY SYSTEMS THROUGHOUT.
11. CLEAN AND REPAIR EXISTING SPRINKLER SYSTEM. REPLACE PIPING. MAIN RISER DRY SYSTEM VALVES TO BE REPLACED.
12. REPLACE ALL 'EXIT' SIGNAGE. INSTALL NEW FIXTURES W/ L.E.D. LAMPING. PROVIDE BATTERY BACK-UP AS REQUIRED TO MEET CODE REQUIREMENTS.
13. PROVIDE NEW EMERGENCY LIGHT FIXTURES IN LOCATIONS REQUIRED. FIXTURES TO HAVE L.E.D. LAMPS.
14. PAINT LOW HANGING PIPING AS REQUIRED BY CODE. (LOW CLEARANCE)
15. EVALUATE DETERIORATING BEAM CONDITIONS. EVALUATION / RECOMMENDATIONS TO BE PRESENTED TO OWNERSHIP FOR REVIEW AND ACTION. REPAIR TO BE ESTABLISHED AS RESULT OF REPORT.
16. MEPFP CONTRACTORS TO PROVIDE COMPLETE SET OF PERMIT DRAWINGS AS PART OF DESIGN / BUILD SCOPE OF WORK.
17. CLEAN, REPAIR, & PAINT ELEVATOR DOORS & FRAMES, EACH LEVEL. PROVIDE NEW, UPDATED CAB FINISHES - FLOOR, WALLS, CEILING (PANELS AND LIGHTING). FINISHES TO BE SELECTED FROM INDUSTRY STANDARD MATERIALS.
18. PROVIDE PAINT SCHEME FOR WAYFINDING SIGNAGE, VARYING COLORS FOR LEVELS 'A' THROUGH 'K'. SIMILAR TO CURRENT COLUMN LEVEL DESIGNATION AND RAMP-WALL DIRECTIONAL ARROWS/LEVEL MARKERS. COLORS TO BE SELECTED BY ARCHITECT.
19. CEILING INSULATION PANELS TO BE REMOVED AS THEY OCCUR, ALL LEVELS.
20. EVALUATIONS WERE MADE FROM A VISUAL OBSERVATIONS. STRUCTURE BEAMS, COLUMNS AND SLABS TO BE EVALUATED BY A STRUCTURAL ENGINEER.
21. SLAB JOINT RUNNING EAST WEST AT COLUMN LINE 7 SHOWS SIGNS OF FAILURE ON SEVERAL LEVELS. EVALUATE DETERIORATING BEAM AND CONDITIONS. VALUATION / RECOMMENDATIONS TO BE PRESENTED TO OWNERSHIP FOR REVIEW AND ACTION. REPAIR TO BE ESTABLISHED AS RESULT OF REPORT.

GARAGE PLAN KEY NOTES

ITEM	NOTE
1	EVALUATE HOLES AND OTHER DAMAGE TO PARKING DECKS AND PROVIDE APPROPRIATE REPAIR. SEE STRUCT. ENGINEERS COMMENTS.
2	REMOVE AND REPLACE EXISTING ROOFING MEMBRANE W/ BITUMEN WATERPROOFING SYSTEM, INCLUDING ALL CURBS.
3	CLEAN AND PAINT GUARDRAIL ASSEMBLY. REPAIR AND REPLACE AS REQUIRED.
4	REPAIR AND REPLACE SEALANT AROUND STACKS.
5	REMOVE EXISTING METAL PANEL WALLS AND ROOF SYSTEM. REPLACE WITH NEW, SIMLAR, METAL PANEL SYSTEM
6	REMOVE DAMAGED AREA OF CURB. REPLACE WITH NEW.
7	REMOVE EXISTING PARKING DECK WATERPROOFING AS REQUIRED TO ALLOW PAVEMENT REPAIR / REPLACEMENT/ RESURFACE.
8	PAINT NEW PARKING STRIPES, CURBS, DIRECTIONAL ARROWS AND RESTRICTED PATTERNS AT EACH LEVEL.
9	REMOVE ITEMS NO LONGER IN SERVICE, COMPLETELY. REPAIR AREAS TO MATCH ADJACENT SURFACES.
10	VERIFY DRAIN SYSTEM IS IN WORKING ORDER. PROVIDE WATER JET CLEANING FOR ENTIRE STORM DRAINAGE SYSTEM. REPAIR OR REPLACE ANY DAMAGED DRAINS OR DRAIN COVERS.
11	REMOVE EXISTING METAL SIDING AND ASSOCIATED ITEMS COMPLETELY. PATCH/REPAIR CONCRETE AS NEEDED.
12	REMOVE AND REPLACE EXISTING DAMPER. EXISTING LOUVER TO REMAIN, CLEAN AND PAINT.
13	EVALUATE ROOF CONDITION. REPLACE / REPAIR AS REQUIRED WITH MEMBRANE SYSTEM.

GARAGE PLAN KEY NOTES

ITEM	NOTE
14	REPLACE LIGHT FIXTURES W/ NEW.
15	EVALUATE EXISTING HANDRAILINGS. PROVIDE OPTIONS TO REMAIN, REPLACE, OR AMEND TO MEET CODE.
16	REPLACE DOOR FRAME, LEAF AND HARDWARE IN THEIR ENTIRETY. NEW HARDWARE TO MATCH EXISTING IN FUNCTION.
17	INSTALL LADDER SECURITY DOOR.
18	REPLACE/ INSTALL COMPLIANT HANDRAILS.
19	REPAIR OR REPLACE EXISTING CEILING & WALL MOUNTED POWERED WAYFINDING SIGNAGE THROUGHOUT.
20	REPLACE EXPANSION JOINT MATERIAL. EVALUATE CONDITION OF METAL TRACKS AS EXISTS. REPLACE AS REQUIRE.
21	REMOVE O.H. DOOR, TRACK AND ASSOCIATED ITEMS COMPLETELY. REPAIR/PATCH CONCRETE AS NEEDED.
22	REMOVE EXISTING RAILS. REPLACE W/ NEW TO MEET CODE. SEE DETAIL 1/A5.01
23	PROVIDE GUARDRAILING BETWEEN LEVELS. SEE DETAIL 2/A5.01
24	PROVIDE BALANCE DAMPER BEHIND ALL EXHAUST GRILLES TO ALLOW FOR EQUAL BALANCING OF EXHAUST LEVELS. CLEAN & PAINT GRILLE ASSEMBLY OR REPLACE AS NEEDED.
25	REPLACE EXHAUST FAN SERVING ELECTRICAL SWITCHGEAR ROOM. PROVIDE NEW IN-LINE FAN SIZED FOR 1,500 CFM.
26	PROVIDE NEW HANDICAP PARKING SIGNAGE 60" ABOVE PARKING AREA. SEE DETAIL 3/A5.01
27	REMOVE EXISTING ACCESSIBILITY SIGNAGE.
28	CLEAN AND PAINT MECHANICAL CURBS, SUPPORTS, AND UNITS TO REMAIN.
29	REPLACE EXISTING EXPANSION COVER. EVALUATE EXPANSION MATERIAL. REPLACE AS REQUIRED.

GARAGE PLAN KEY NOTES

ITEM	NOTE
30	REMOVE ALL EXISTING STEAM RADIATORS AND REPLACE W/ 5KW ELECTRIC HEATER @ BOTTOM LEVEL.
31	EXISTING COOLANT LINES SERVING EMEGENCY GENERATORS TO REMAIN.
32	EXISTING PANELS TO REMAIN TO SERVE NEW AND EXISTING LIGHTING AND EQUIPMENT. PROVIDE BID ALTERNATE PRICING TO REPLACE PANELS AND FEEDERS IN THEIR ENTIRETY BACK TO DISTRIBUTION PANELS.
34	REMOVE OR ABANDON IN PLACE EXISTING FANS PREVIOUSLY SERVING THE PAINT BOOTH.
35	EXISTING AIR-COOLED CONDENSING UNITS SERVINIG EMERGENCY GENERATORS TO REMAIN. CONTRACTOR TO INCLUDE BID ALTERNATE PRICING TO REPAIR UNITS TO BRING INTO FULL WORKING ORDER.
36	REMOVE EXISTING UNIT HEATER AND COOLING UNIT. REPLACE BOTH WITH NEW.
37	REPLACE EXISTING EXHAUST FAN W/ NEW 27,500 CFM FAN. PROVIDE ADAPTER CURB AS REQ. VERIFY ELECTRICAL & RECONNECT TO NEW FAN
38	MEP CONTRACTORS TO COORDINATE WITH GENERAL CONTRACTOR TO MEET ALL CODE REQUIREMENTS FOR NEW OR REFURBISHED ELEVATOR EQUIPMENT. THIS SHALL INCLUDE EQUIPMENT POWER FEEDERS, ALONG WITH ANY REQUIREMENTS TO PROVIDE CODE COMPLIANT SHAFT, INCLUDING EXHAUST FAN, SUMP PUMP, LIGHTING AND MISCELLANEOUS POWER REQUIREMENTS.

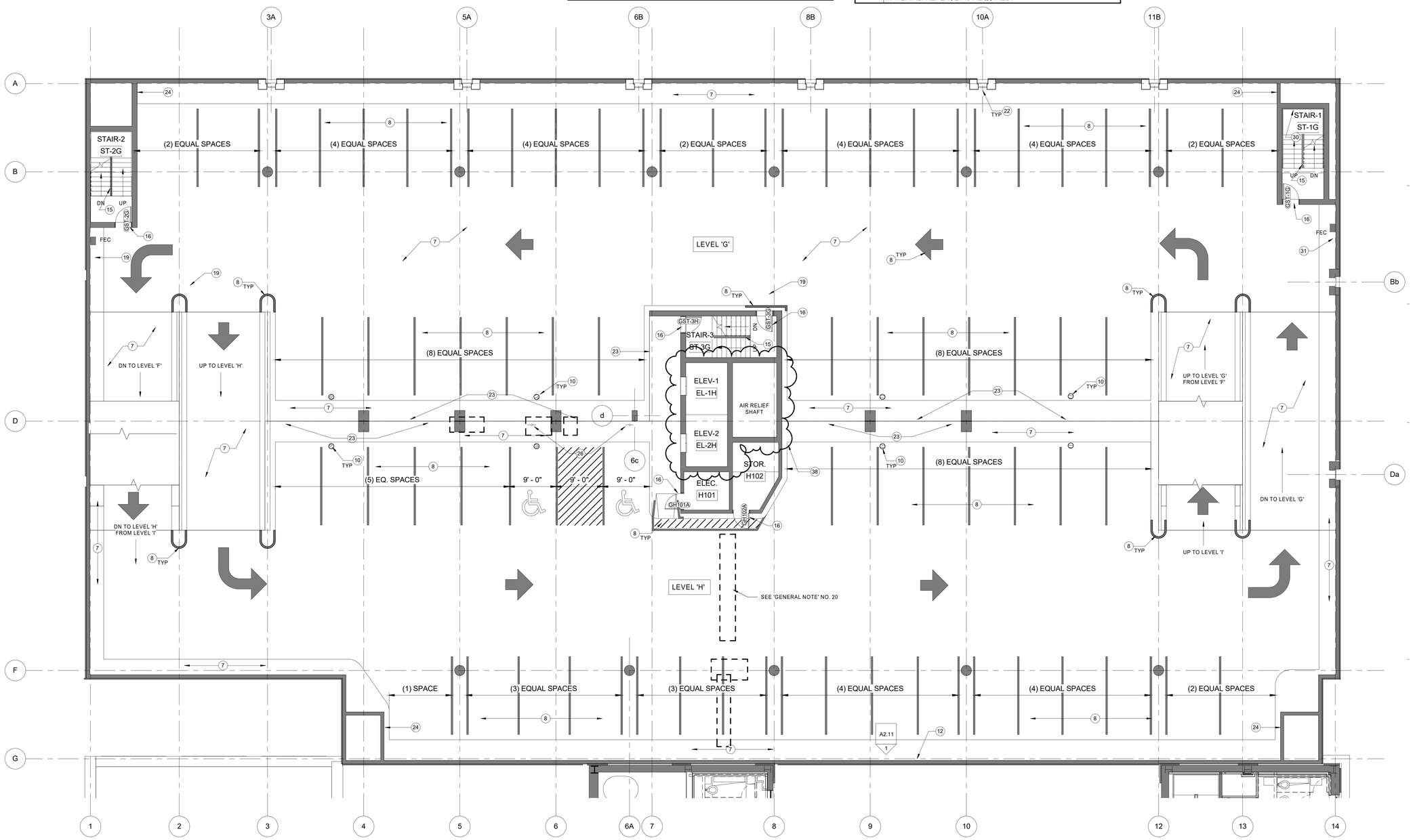

1 Garage - Levels G & H
A1.07G 1/8" = 1'-0"

BROWNING DAY MULLINS DIERDORF
LEADERSHIP + DESIGN®

Browning Day Mullins Dierdorf Architects
Architecture
Landscape Architecture
Planning
Interior Design
626 North Illinois Street
Indianapolis, Indiana 46204
Phone: (317) 635-5030
Website: www.bdmd.com

Delta Quad Holdings, LLC
Owner

Rau Construction Co.
Construction Manager
9101 West 110th Street, Suite 150
Overland Park, Kansas 66210
Phone: (913) 642-6000
Website: www.website.com

Lawson Elser, Inc.
Structural Engineer
650 East Carmel Drive, Suite 150
Carmel, Indiana 46032
Phone: (317) 574-5409
Website: www.lawsonelser.com

Hoss & Brown Engineers, Inc.
MEP Engineer
11205 West 79th Street, Suite 102
Lenexa, Kansas 66214
Phone: (913) 362-9090
Website: www.h-be.com

SK Design Group, Inc.
Civil Engineer
4600 College Boulevard, Suite 100
Overland Park, KS 66211
Phone: (913) 451-1818
Website: www.skdesigngroup.net

Matchline Design Group, LLC
Interior Design
10300 North Central Expressway, Suite 335
Dallas, TX 75231
Phone: (972) 707-0568
Website: www.matchlinedesign.com

GREGORY E. JACOBY REGISTERED No. AR00860208 STATE OF MISSOURI ARCHITECT

CERTIFICATION

Construction Documents
Garage Maintenance

The Grand Reserve

925 Grand Boulevard
Kansas City, MO 64198

Project No.: 18A023
Drawn By: Author
Checked By: Checker
Scale: See Drawing
Issue Date: May 3, 2019

REVISION SCHEDULE		
Rev. #	Revision Description	Issue Date
1		

Garage - Levels G & H

A1.07G

\\xd-uem01\UserShare\jfram\Documents\18A023_K.C.Embassy Suites_Garage_R17_jfram.rvt

5/10/2019 11:24:27 AM

GENERAL NOTES - TYPICAL ALL FLOORS

1. REPAIR OR REPLACE COPING STONE TO MATCH BALANCE.
2. REPLACE ALL FIRE EXTINGUISHER CABINETS AND EXTINGUISHERS W/ NEW. SHEET NOTE 'FEC'.
3. ALL PIPING TO BE CLEANED AND PAINTED.
4. CLEAN, REPAIR AND PAINT ALL BOLLARDS AND OTHER EXISTING GUARDS.
5. CLEAN, REPAIR AND PAINT ALL PARTIAL AND FULL HEIGHT WALLS AND COLUMNS COMPLETELY, LEVELS 'A' THROUGH 'K'. CLEAN AND PATCH CONCRETE WALLS ON LEVELS 'L' & 'M'.
6. CLEAN, REPAIR AND PAINT ALL CEILINGS AND BEAMS COMPLETELY.
7. CLEAN, REPAIR AND PAINT ALL CONDUIT TO REMAIN.
8. REPLACE LIGHTING THROUGHOUT W/ NEW L.E.D. TYPE FIXTURES. PROVIDE NEW CIRCUITRY AND CONTROLS AS REQUIRED FOR PROPER OPERATION. COVERAGE OF NEW LIGHTING SHALL INCLUDE ALL PARKING AND DRIVE AREAS (W/ EXCEPTION OF LIGHTING REQ. BY CODE, TOP DECK SHALL REMAIN UNLIT), ALONG W/ ALL STORAGE AND ANCILLARY SPACE. ELECTRICAL CONTRACTOR TO PROPOSE FIXTURE TYPES.
9. PROVIDE NEW L.E.D. LIGHT FIXTURES W/ INTEGRAL EMERGENCY LIGHTING AND INTEGRAL MOTION DETECTORS THROUGHOUT STAIRWELLS.
10. VERIFY W/ OWNER/ USER GROUP REQUIREMENTS OF AUDIO & SECURITY SYSTEMS THROUGHOUT.
11. CLEAN AND REPAIR EXISTING SPRINKLER SYSTEM. REPLACE PIPING. MAIN RISER DRY SYSTEM VALVES TO BE REPLACED.
12. REPLACE ALL 'EXIT' SIGNAGE. INSTALL NEW FIXTURES W/ L.E.D. LAMPING. PROVIDE BATTERY BACK-UP AS REQUIRED TO MEET CODE REQUIREMENTS.
13. PROVIDE NEW EMERGENCY LIGHT FIXTURES IN LOCATIONS REQUIRED. FIXTURES TO HAVE L.E.D. LAMPS.
14. PAINT LOW HANGING PIPING AS REQUIRED BY CODE. (LOW CLEARANCE)
15. EVALUATE DETERIORATING BEAM CONDITIONS. EVALUATION / RECOMMENDATIONS TO BE PRESENTED TO OWNERSHIP FOR REVIEW AND ACTION. REPAIR TO BE ESTABLISHED AS RESULT OF REPORT.
16. MEPFP CONTRACTORS TO PROVIDE COMPLETE SET OF PERMIT DRAWINGS AS PART OF DESIGN / BUILD SCOPE OF WORK.
17. CLEAN, REPAIR, & PAINT ELEVATOR DOORS & FRAMES, EACH LEVEL. PROVIDE NEW, UPDATED CAB FINISHES - FLOOR, WALLS, CEILING (PANELS AND LIGHTING). FINISHES TO BE SELECTED FROM INDUSTRY STANDARD MATERIALS.
18. PROVIDE PAINT SCHEME FOR WAYFINDING SIGNAGE, VARYING COLORS FOR LEVELS 'A' THROUGH 'K'. SIMILAR TO CURRENT COLUMN LEVEL DESIGNATION AND RAMP-WALL DIRECTIONAL ARROWS/LEVEL MARKERS. COLORS TO BE SELECTED BY ARCHITECT.
19. CEILING INSULATION PANELS TO BE REMOVED AS THEY OCCUR, ALL LEVELS.
20. EVALUATIONS WERE MADE FROM A VISUAL OBSERVATIONS. STRUCTURE BEAMS, COLUMNS AND SLABS TO BE EVALUATED BY A STRUCTURAL ENGINEER.
21. SLAB JOINT RUNNING EAST WEST AT COLUMN LINE 7 SHOWS SIGNS OF FAILURE ON SEVERAL LEVELS. EVALUATE DETERIORATING BEAM AND CONDITIONS. VALUATION / RECOMMENDATIONS TO BE PRESENTED TO OWNERSHIP FOR REVIEW AND ACTION. REPAIR TO BE ESTABLISHED AS RESULT OF REPORT.

GARAGE PLAN KEY NOTES

ITEM	NOTE
1	EVALUATE HOLES AND OTHER DAMAGE TO PARKING DECKS AND PROVIDE APPROPRIATE REPAIR. SEE STRUCT. ENGINEERS COMMENTS.
2	REMOVE AND REPLACE EXISTING ROOFING MEMBRANE W/ BITUMEN WATERPROOFING SYSTEM, INCLUDING ALL CURBS.
3	CLEAN AND PAINT GUARDRAIL ASSEMBLY. REPAIR AND REPLACE AS REQUIRED.
4	REPAIR AND REPLACE SEALANT AROUND STACKS.
5	REMOVE EXISTING METAL PANEL WALLS AND ROOF SYSTEM. REPLACE WITH NEW, SIMLAR, METAL PANEL SYSTEM
6	REMOVE DAMAGED AREA OF CURB. REPLACE WITH NEW.
7	REMOVE EXISTING PARKING DECK WATERPROOFING AS REQUIRED TO ALLOW PAVEMENT REPAIR / REPLACEMENT/ RESURFACE.
8	PAINT NEW PARKING STRIPES, CURBS, DIRECTIONAL ARROWS AND RESTRICTED PATTERNS AT EACH LEVEL.
9	REMOVE ITEMS NO LONGER IN SERVICE, COMPLETELY. REPAIR AREAS TO MATCH ADJACENT SURFACES.
10	VERIFY DRAIN SYSTEM IS IN WORKING ORDER. PROVIDE WATER JET CLEANING FOR ENTIRE STORM DRAINAGE SYSTEM. REPAIR OR REPLACE ANY DAMAGED DRAINS OR DRAIN COVERS.
11	REMOVE EXISTING METAL SIDING AND ASSOCIATED ITEMS COMPLETELY. PATCH/REPAIR CONCRETE AS NEEDED.
12	REMOVE AND REPLACE EXISTING DAMPER. EXISTING LOUVER TO REMAIN, CLEAN AND PAINT.
13	EVALUATE ROOF CONDITION. REPLACE / REPAIR AS REQUIRED WITH MEMBRANE SYSTEM.

GARAGE PLAN KEY NOTES

ITEM	NOTE
14	REPLACE LIGHT FIXTURES W/ NEW.
15	EVALUATE EXISTING HANDRAILINGS. PROVIDE OPTIONS TO REMAIN, REPLACE, OR AMEND TO MEET CODE.
16	REPLACE DOOR FRAME, LEAF AND HARDWARE IN THEIR ENTIRETY. NEW HARDWARE TO MATCH EXISTING IN FUNCTION.
17	INSTALL LADDER SECURITY DOOR.
18	REPLACE/ INSTALL COMPLIANT HANDRAILS.
19	REPAIR OR REPLACE EXISTING CEILING & WALL MOUNTED POWERED WAYFINDING SIGNAGE THROUGHOUT.
20	REPLACE EXPANSION JOINT MATERIAL. EVALUATE CONDITION OF METAL TRACKS AS EXISTS. REPLACE AS REQUIRE.
21	REMOVE O.H. DOOR, TRACK AND ASSOCIATED ITEMS COMPLETELY. REPAIR/PATCH CONCRETE AS NEEDED.
22	REMOVE EXISTING RAILS. REPLACE W/ NEW TO MEET CODE. SEE DETAIL 1/A5.01
23	PROVIDE GUARDRAILING BETWEEN LEVELS. SEE DETAIL 2/A5.01
24	PROVIDE BALANCE DAMPER BEHIND ALL EXHAUST GRILLES TO ALLOW FOR EQUAL BALANCING OF EXHAUST LEVELS. CLEAN & PAINT GRILLE ASSEMBLY OR REPLACE AS NEEDED.
25	REPLACE EXHAUST FAN SERVING ELECTRICAL SWITCHGEAR ROOM. PROVIDE NEW IN-LINE FAN SIZED FOR 1,500 CFM.
26	PROVIDE NEW HANDICAP PARKING SIGNAGE 60" ABOVE PARKING AREA. SEE DETAIL 3/A5.01
27	REMOVE EXISTING ACCESSIBILITY SIGNAGE.
28	CLEAN AND PAINT MECHANICAL CURBS, SUPPORTS, AND UNITS TO REMAIN.
29	REPLACE EXISTING EXPANSION COVER. EVALUATE EXPANSION MATERIAL. REPLACE AS REQUIRED.

GARAGE PLAN KEY NOTES

ITEM	NOTE
30	REMOVE ALL EXISTING STEAM RADIATORS AND REPLACE W/ 5KW ELECTRIC HEATER @ BOTTOM LEVEL.
31	EXISTING COOLANT LINES SERVING EMEGENCY GENERATORS TO REMAIN.
32	EXISTING PANELS TO REMAIN TO SERVE NEW AND EXISTING LIGHTING AND EQUIPMENT. PROVIDE BID ALTERNATE PRICING TO REPLACE PANELS AND FEEDERS IN THEIR ENTIRETY BACK TO DISTRIBUTION PANELS.
34	REMOVE OR ABANDON IN PLACE EXISTING FANS PREVIOUSLY SERVING THE PAINT BOOTH.
35	EXISTING AIR-COOLED CONDENSING UNITS SERVINIG EMERGENCY GENERATORS TO REMAIN. CONTRACTOR TO INCLUDE BID ALTERNATE PRICING TO REPAIR UNITS TO BRING INTO FULL WORKING ORDER.
36	REMOVE EXISTING UNIT HEATER AND COOLING UNIT. REPLACE BOTH WITH NEW.
37	REPLACE EXISTING EXHAUST FAN W/ NEW 27,500 CFM FAN. PROVIDE ADAPTER CURB AS REQ. VERIFY ELECTRICAL & RECONNECT TO NEW FAN
38	MEP CONTRACTORS TO COORDINATE WITH GENERAL CONTRACTOR TO MEET ALL CODE REQUIREMENTS FOR NEW OR REFURBISHED ELEVATOR EQUIPMENT. THIS SHALL INCLUDE EQUIPMENT POWER FEEDERS, ALONG WITH ANY REQUIREMENTS TO PROVIDE CODE COMPLIANT SHAFT, INCLUDING EXHAUST FAN, SUMP PUMP, LIGHTING AND MISCELLANEOUS POWER REQUIREMENTS.

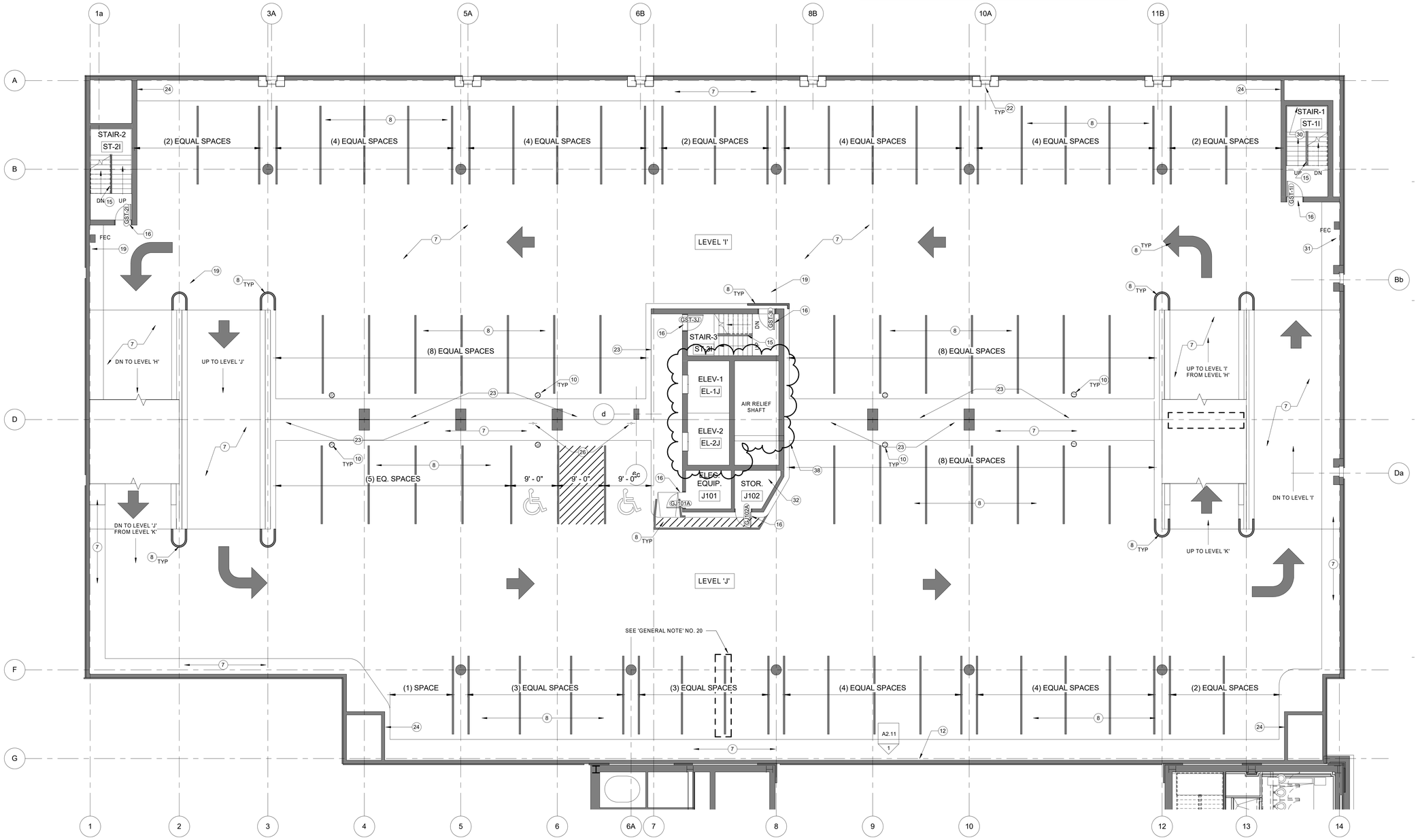

1 Garage - Levels I & J
A1.08G 1/8" = 1'-0"

BROWNING DAY MULLINS DIERDORF
LEADERSHIP + DESIGN®

Browning Day Mullins Dierdorf Architects
Architecture
Landscape Architecture
Planning
Interior Design
626 North Illinois Street
Indianapolis, Indiana 46204
Phone: (317) 635-5030
Website: www.bdmd.com

Delta Quad Holdings, LLC
Owner

Rau Construction Co.
Construction Manager
9101 West 110th Street, Suite 150
Overland Park, Kansas 66210
Phone: (913) 642-6000
Website: www.website.com

Lawson Elser, Inc.
Structural Engineer
650 East Carmel Drive, Suite 150
Carmel, Indiana 46032
Phone: (317) 574-5409
Website: www.lawsonelser.com

Hoss & Brown Engineers, Inc.
MEP Engineer
11205 West 79th Street, Suite 102
Lenexa, Kansas 66214
Phone: (913) 362-9090
Website: www.h-be.com

SK Design Group, Inc.
Civil Engineer
4600 College Boulevard, Suite 100
Overland Park, KS 66211
Phone: (913) 451-1818
Website: www.skdesigngroup.net

Matchline Design Group, LLC
Interior Design
10300 North Central Expressway, Suite 335
Dallas, TX 75231
Phone: (972) 707-0568
Website: www.matchlinedesign.com

GREGORY E. JACOBY REGISTERED No. AR00860208 STATE OF INDIANA ARCHITECT

CERTIFICATION

Construction Documents
Garage Maintenance

The Grand Reserve

925 Grand Boulevard
Kansas City, MO 64198

Project No.: 18A023
Drawn By: Author
Checked By: Checker
Scale: See Drawing
Issue Date: May 3, 2019

REVISION SCHEDULE		
Rev. #	Revision Description	Issue Date
1		

Garage - Levels I & J

A1.08G

\\sd-uemc01\UserShare\jfram\Documents\18A023_K.C.Embassy Suites_Garage_R17_jfram.rvt

5/10/2019 11:24:31 AM

GENERAL NOTES - TYPICAL ALL FLOORS

1. REPAIR OR REPLACE COPING STONE TO MATCH BALANCE.
2. REPLACE ALL FIRE EXTINGUISHER CABINETS AND EXTINGUISHERS W/ NEW. SHEET NOTE 'FEC'.
3. ALL PIPING TO BE CLEANED AND PAINTED.
4. CLEAN, REPAIR AND PAINT ALL BOLLARDS AND OTHER EXISTING GUARDS.
5. CLEAN, REPAIR AND PAINT ALL PARTIAL AND FULL HEIGHT WALLS AND COLUMNS COMPLETELY, LEVELS 'A' THROUGH 'K'. CLEAN AND PATCH CONCRETE WALLS ON LEVELS 'L' & 'M'.
6. CLEAN, REPAIR AND PAINT ALL CEILINGS AND BEAMS COMPLETELY.
7. CLEAN, REPAIR AND PAINT ALL CONDUIT TO REMAIN.
8. REPLACE LIGHTING THROUGHOUT W/ NEW L.E.D. TYPE FIXTURES. PROVIDE NEW CIRCUITRY AND CONTROLS AS REQUIRED FOR PROPER OPERATION. COVERAGE OF NEW LIGHTING SHALL INCLUDE ALL PARKING AND DRIVE AREAS (W/ EXCEPTION OF LIGHTING REQ. BY CODE, TOP DECK SHALL REMAIN UNLIT), ALONG W/ ALL STORAGE AND ANCILLARY SPACE. ELECTRICAL CONTRACTOR TO PROPOSE FIXTURE TYPES.
9. PROVIDE NEW L.E.D. LIGHT FIXTURES W/ INTEGRAL EMERGENCY LIGHTING AND INTEGRAL MOTION DETECTORS THROUGHOUT STAIRWELLS.
10. VERIFY W/ OWNER/ USER GROUP REQUIREMENTS OF AUDIO & SECURITY SYSTEMS THROUGHOUT.
11. CLEAN AND REPAIR EXISTING SPRINKLER SYSTEM. REPLACE PIPING. MAIN RISER DRY SYSTEM VALVES TO BE REPLACED.
12. REPLACE ALL 'EXIT' SIGNAGE. INSTALL NEW FIXTURES W/ L.E.D. LAMPING. PROVIDE BATTERY BACK-UP AS REQUIRED TO MEET CODE REQUIREMENTS.
13. PROVIDE NEW EMERGENCY LIGHT FIXTURES IN LOCATIONS REQUIRED. FIXTURES TO HAVE L.E.D. LAMPS.
14. PAINT LOW HANGING PIPING AS REQUIRED BY CODE. (LOW CLEARANCE)
15. EVALUATE DETERIORATING BEAM CONDITIONS. EVALUATION / RECOMMENDATIONS TO BE PRESENTED TO OWNERSHIP FOR REVIEW AND ACTION. REPAIR TO BE ESTABLISHED AS RESULT OF REPORT.
16. MEPFP CONTRACTORS TO PROVIDE COMPLETE SET OF PERMIT DRAWINGS AS PART OF DESIGN / BUILD SCOPE OF WORK.
17. CLEAN, REPAIR, & PAINT ELEVATOR DOORS & FRAMES, EACH LEVEL. PROVIDE NEW, UPDATED CAB FINISHES - FLOOR, WALLS, CEILING (PANELS AND LIGHTING). FINISHES TO BE SELECTED FROM INDUSTRY STANDARD MATERIALS.
18. PROVIDE PAINT SCHEME FOR WAYFINDING SIGNAGE, VARYING COLORS FOR LEVELS 'A' THROUGH 'K'. SIMILAR TO CURRENT COLUMN LEVEL DESIGNATION AND RAMP-WALL DIRECTIONAL ARROWS/LEVEL MARKERS. COLORS TO BE SELECTED BY ARCHITECT.
19. CEILING INSULATION PANELS TO BE REMOVED AS THEY OCCUR, ALL LEVELS.
20. EVALUATIONS WERE MADE FROM A VISUAL OBSERVATIONS. STRUCTURE BEAMS, COLUMNS AND SLABS TO BE EVALUATED BY A STRUCTURAL ENGINEER.
21. SLAB JOINT RUNNING EAST WEST AT COLUMN LINE 7 SHOWS SIGNS OF FAILURE ON SEVERAL LEVELS. EVALUATE DETERIORATING BEAM AND CONDITIONS. VALUATION / RECOMMENDATIONS TO BE PRESENTED TO OWNERSHIP FOR REVIEW AND ACTION. REPAIR TO BE ESTABLISHED AS RESULT OF REPORT.

GARAGE PLAN KEY NOTES

ITEM	NOTE
1	EVALUATE HOLES AND OTHER DAMAGE TO PARKING DECKS AND PROVIDE APPROPRIATE REPAIR. SEE STRUCT. ENGINEERS COMMENTS.
2	REMOVE AND REPLACE EXISTING ROOFING MEMBRANE W/ BITUMEN WATERPROOFING SYSTEM, INCLUDING ALL CURBS.
3	CLEAN AND PAINT GUARDRAIL ASSEMBLY. REPAIR AND REPLACE AS REQUIRED.
4	REPAIR AND REPLACE SEALANT AROUND STACKS.
5	REMOVE EXISTING METAL PANEL WALLS AND ROOF SYSTEM. REPLACE WITH NEW, SIMLAR, METAL PANEL SYSTEM
6	REMOVE DAMAGED AREA OF CURB. REPLACE WITH NEW.
7	REMOVE EXISTING PARKING DECK WATERPROOFING AS REQUIRED TO ALLOW PAVEMENT REPAIR / REPLACEMENT/ RESURFACE.
8	PAINT NEW PARKING STRIPES, CURBS, DIRECTIONAL ARROWS AND RESTRICTED PATTERNS AT EACH LEVEL.
9	REMOVE ITEMS NO LONGER IN SERVICE, COMPLETELY. REPAIR AREAS TO MATCH ADJACENT SURFACES.
10	VERIFY DRAIN SYSTEM IS IN WORKING ORDER. PROVIDE WATER JET CLEANING FOR ENTIRE STORM DRAINAGE SYSTEM. REPAIR OR REPLACE ANY DAMAGED DRAINS OR DRAIN COVERS.
11	REMOVE EXISTING METAL SIDING AND ASSOCIATED ITEMS COMPLETELY. PATCH/REPAIR CONCRETE AS NEEDED.
12	REMOVE AND REPLACE EXISTING DAMPER. EXISTING LOUVER TO REMAIN, CLEAN AND PAINT.
13	EVALUATE ROOF CONDITION. REPLACE / REPAIR AS REQUIRED WITH MEMBRANE SYSTEM.

GARAGE PLAN KEY NOTES

ITEM	NOTE
14	REPLACE LIGHT FIXTURES W/ NEW.
15	EVALUATE EXISTING HANDRAILINGS. PROVIDE OPTIONS TO REMAIN, REPLACE, OR AMEND TO MEET CODE.
16	REPLACE DOOR FRAME, LEAF AND HARDWARE IN THEIR ENTIRETY. NEW HARDWARE TO MATCH EXISTING IN FUNCTION.
17	INSTALL LADDER SECURITY DOOR.
18	REPLACE/ INSTALL COMPLIANT HANDRAILS.
19	REPAIR OR REPLACE EXISTING CEILING & WALL MOUNTED POWERED WAYFINDING SIGNAGE THROUGHOUT.
20	REPLACE EXPANSION JOINT MATERIAL. EVALUATE CONDITION OF METAL TRACKS AS EXISTS. REPLACE AS REQUIRE.
21	REMOVE O.H. DOOR, TRACK AND ASSOCIATED ITEMS COMPLETELY. REPAIR/PATCH CONCRETE AS NEEDED.
22	REMOVE EXISTING RAILS. REPLACE W/ NEW TO MEET CODE. SEE DETAIL 1/A5.01
23	PROVIDE GUARDRAILING BETWEEN LEVELS. SEE DETAIL 2/A5.01
24	PROVIDE BALANCE DAMPER BEHIND ALL EXHAUST GRILLES TO ALLOW FOR EQUAL BALANCING OF EXHAUST LEVELS. CLEAN & PAINT GRILLE ASSEMBLY OR REPLACE AS NEEDED.
25	REPLACE EXHAUST FAN SERVING ELECTRICAL SWITCHGEAR ROOM. PROVIDE NEW IN-LINE FAN SIZED FOR 1,500 CFM.
26	PROVIDE NEW HANDICAP PARKING SIGNAGE 60" ABOVE PARKING AREA. SEE DETAIL 3/A5.01
27	REMOVE EXISTING ACCESSIBILITY SIGNAGE.
28	CLEAN AND PAINT MECHANICAL CURBS, SUPPORTS, AND UNITS TO REMAIN.
29	REPLACE EXISTING EXPANSION COVER. EVALUATE EXPANSION MATERIAL. REPLACE AS REQUIRED.

GARAGE PLAN KEY NOTES

ITEM	NOTE
30	REMOVE ALL EXISTING STEAM RADIATORS AND REPLACE W/ 5KW ELECTRIC HEATER @ BOTTOM LEVEL.
31	EXISTING COOLANT LINES SERVING EMEGENCY GENERATORS TO REMAIN.
32	EXISTING PANELS TO REMAIN TO SERVE NEW AND EXISTING LIGHTING AND EQUIPMENT. PROVIDE BID ALTERNATE PRICING TO REPLACE PANELS AND FEEDERS IN THEIR ENTIRETY BACK TO DISTRIBUTION PANELS.
34	REMOVE OR ABANDON IN PLACE EXISTING FANS PREVIOUSLY SERVING THE PAINT BOOTH.
35	EXISTING AIR-COOLED CONDENSING UNITS SERVINIG EMERGENCY GENERATORS TO REMAIN. CONTRACTOR TO INCLUDE BID ALTERNATE PRICING TO REPAIR UNITS TO BRING INTO FULL WORKING ORDER.
36	REMOVE EXISTING UNIT HEATER AND COOLING UNIT. REPLACE BOTH WITH NEW.
37	REPLACE EXISTING EXHAUST FAN W/ NEW 27,500 CFM FAN. PROVIDE ADAPTER CURB AS REQ. VERIFY ELECTRICAL & RECONNECT TO NEW FAN
38	MEP CONTRACTORS TO COORDINATE WITH GENERAL CONTRACTOR TO MEET ALL CODE REQUIREMENTS FOR NEW OR REFURBISHED ELEVATOR EQUIPMENT. THIS SHALL INCLUDE EQUIPMENT POWER FEEDERS, ALONG WITH ANY REQUIREMENTS TO PROVIDE CODE COMPLIANT SHAFT, INCLUDING EXHAUST FAN, SUMP PUMP, LIGHTING AND MISCELLANEOUS POWER REQUIREMENTS.

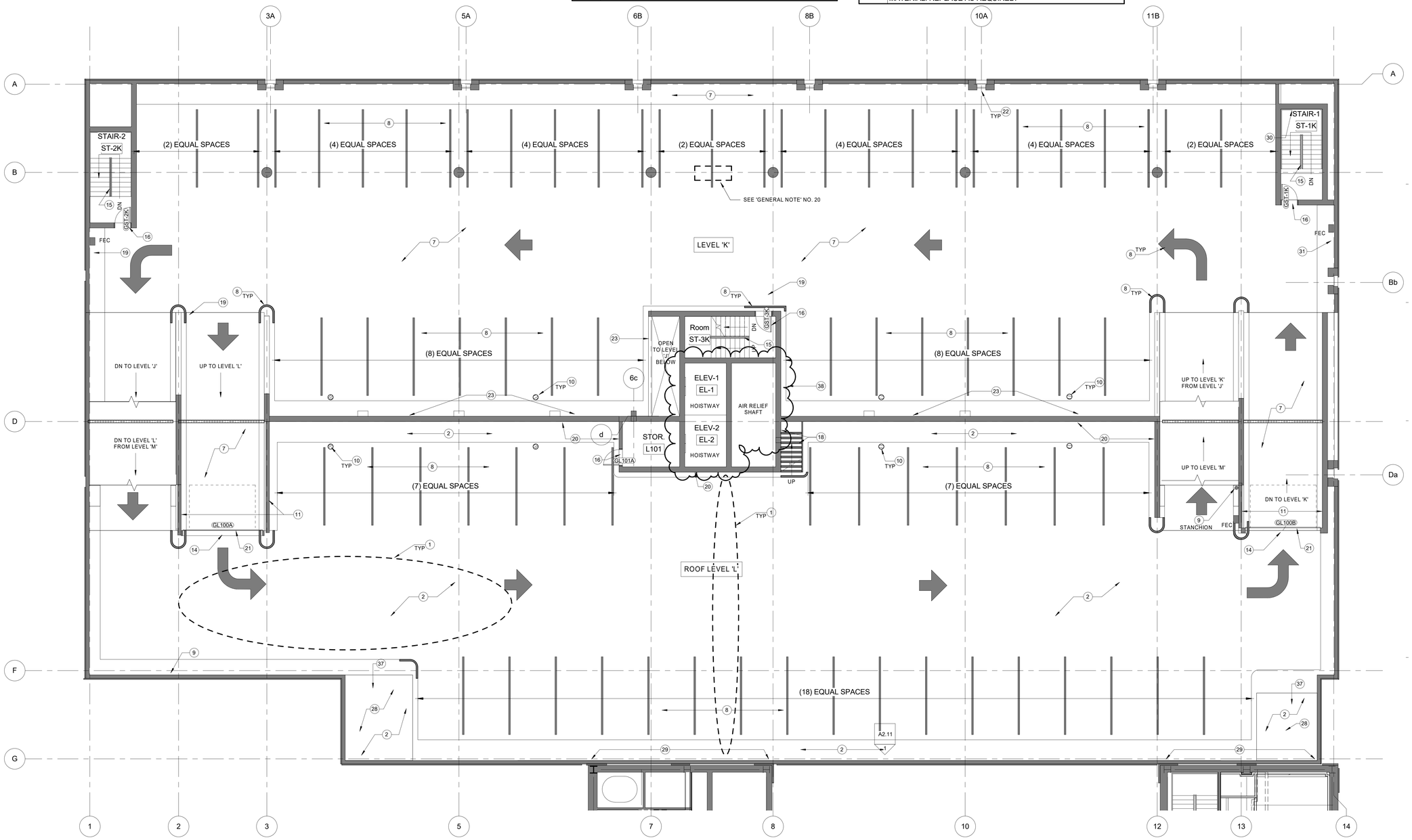

1 Garage - Levels K & L
A1.09G 1/8" = 1'-0"

BROWNING DAY MULLINS DIERDORF
LEADERSHIP + DESIGN®

Browning Day Mullins Dierdorf Architects
Architecture
Landscape Architecture
Planning
Interior Design
626 North Illinois Street
Indianapolis, Indiana 46204
Phone: (317) 635-5030
Website: www.bdmd.com

Delta Quad Holdings, LLC
Owner

Rau Construction Co.
Construction Manager
9101 West 110th Street, Suite 150
Overland Park, Kansas 66210
Phone: (913) 642-6000
Website: www.website.com

Lawson Elser, Inc.
Structural Engineer
650 East Carmel Drive, Suite 150
Carmel, Indiana 46032
Phone: (317) 574-5409
Website: www.lawsonelser.com

Hoss & Brown Engineers, Inc.
MEP Engineer
11205 West 79th Street, Suite 102
Lenexa, Kansas 66214
Phone: (913) 362-9090
Website: www.h-be.com

SK Design Group, Inc.
Civil Engineer
4600 College Boulevard, Suite 100
Overland Park, KS 66211
Phone: (913) 451-1818
Website: www.skdesigngroup.net

Matchline Design Group, LLC
Interior Design
10300 North Central Expressway, Suite 335
Dallas, TX 75231
Phone: (972) 707-0568
Website: www.matchlinedesign.com

GREGORY E. JACOBY REGISTERED No. AR00800208 STATE OF INDIANA ARCHITECT

CERTIFICATION

Construction Documents
Garage Maintenance

The Grand Reserve

925 Grand Boulevard
Kansas City, MO 64198

Project No.: 18A023
Drawn By: Author
Checked By: Checker
Scale: See Drawing
Issue Date: May 3, 2019

REVISION SCHEDULE		
Rev. #	Revision Description	Issue Date
1		

Garage - Levels K & L

A1.09G

\\xs\uem011\UserShare\jfram\Documents\18A023_K.C.Embassy Suites_Garage_R17_jfram.rvt

5/10/2019 11:24:35 AM

GENERAL NOTES - TYPICAL ALL FLOORS

1. REPAIR OR REPLACE COPING STONE TO MATCH BALANCE.
2. REPLACE ALL FIRE EXTINGUISHER CABINETS AND EXTINGUISHERS W/ NEW. SHEET NOTE 'FEC'.
3. ALL PIPING TO BE CLEANED AND PAINTED.
4. CLEAN, REPAIR AND PAINT ALL BOLLARDS AND OTHER EXISTING GUARDS.
5. CLEAN, REPAIR AND PAINT ALL PARTIAL AND FULL HEIGHT WALLS AND COLUMNS COMPLETELY, LEVELS 'A' THROUGH 'K'. CLEAN AND PATCH CONCRETE WALLS ON LEVELS 'L' & 'M'.
6. CLEAN, REPAIR AND PAINT ALL CEILINGS AND BEAMS COMPLETELY.
7. CLEAN, REPAIR AND PAINT ALL CONDUIT TO REMAIN.
8. REPLACE LIGHTING THROUGHOUT W/ NEW L.E.D. TYPE FIXTURES. PROVIDE NEW CIRCUITRY AND CONTROLS AS REQUIRED FOR PROPER OPERATION. COVERAGE OF NEW LIGHTING SHALL INCLUDE ALL PARKING AND DRIVE AREAS (W/ EXCEPTION OF LIGHTING REQ. BY CODE, TOP DECK SHALL REMAIN UNLIT), ALONG W/ ALL STORAGE AND ANCILLARY SPACE. ELECTRICAL CONTRACTOR TO PROPOSE FIXTURE TYPES.
9. PROVIDE NEW L.E.D. LIGHT FIXTURES W/ INTEGRAL EMERGENCY LIGHTING AND INTEGRAL MOTION DETECTORS THROUGHOUT STAIRWELLS.
10. VERIFY W/ OWNER/ USER GROUP REQUIREMENTS OF AUDIO & SECURITY SYSTEMS THROUGHOUT.
11. CLEAN AND REPAIR EXISTING SPRINKLER SYSTEM. REPLACE PIPING. MAIN RISER DRY SYSTEM VALVES TO BE REPLACED.
12. REPLACE ALL 'EXIT' SIGNAGE. INSTALL NEW FIXTURES W/ L.E.D. LAMPING. PROVIDE BATTERY BACK-UP AS REQUIRED TO MEET CODE REQUIREMENTS.
13. PROVIDE NEW EMERGENCY LIGHT FIXTURES IN LOCATIONS REQUIRED. FIXTURES TO HAVE L.E.D. LAMPS.
14. PAINT LOW HANGING PIPING AS REQUIRED BY CODE. (LOW CLEARANCE)
15. EVALUATE DETERIORATING BEAM CONDITIONS. EVALUATION / RECOMMENDATIONS TO BE PRESENTED TO OWNERSHIP FOR REVIEW AND ACTION. REPAIR TO BE ESTABLISHED AS RESULT OF REPORT.
16. MEPFP CONTRACTORS TO PROVIDE COMPLETE SET OF PERMIT DRAWINGS AS PART OF DESIGN / BUILD SCOPE OF WORK.
17. CLEAN, REPAIR, & PAINT ELEVATOR DOORS & FRAMES, EACH LEVEL. PROVIDE NEW, UPDATED CAB FINISHES - FLOOR, WALLS, CEILING (PANELS AND LIGHTING). FINISHES TO BE SELECTED FROM INDUSTRY STANDARD MATERIALS.
18. PROVIDE PAINT SCHEME FOR WAYFINDING SIGNAGE, VARYING COLORS FOR LEVELS 'A' THROUGH 'K'. SIMILAR TO CURRENT COLUMN LEVEL DESIGNATION AND RAMP-WALL DIRECTIONAL ARROWS/LEVEL MARKERS. COLORS TO BE SELECTED BY ARCHITECT.
19. CEILING INSULATION PANELS TO BE REMOVED AS THEY OCCUR, ALL LEVELS.
20. EVALUATIONS WERE MADE FROM A VISUAL OBSERVATIONS. STRUCTURE BEAMS, COLUMNS AND SLABS TO BE EVALUATED BY A STRUCTURAL ENGINEER.
21. SLAB JOINT RUNNING EAST WEST AT COLUMN LINE 7 SHOWS SIGNS OF FAILURE ON SEVERAL LEVELS. EVALUATE DETERIORATING BEAM AND CONDITIONS. VALUATION / RECOMMENDATIONS TO BE PRESENTED TO OWNERSHIP FOR REVIEW AND ACTION. REPAIR TO BE ESTABLISHED AS RESULT OF REPORT.

GARAGE PLAN KEY NOTES

ITEM	NOTE
1	EVALUATE HOLES AND OTHER DAMAGE TO PARKING DECKS AND PROVIDE APPROPRIATE REPAIR. SEE STRUCT. ENGINEERS COMMENTS.
2	REMOVE AND REPLACE EXISTING ROOFING MEMBRANE W/ BITUMEN WATERPROOFING SYSTEM, INCLUDING ALL CURBS.
3	CLEAN AND PAINT GUARDRAIL ASSEMBLY. REPAIR AND REPLACE AS REQUIRED.
4	REPAIR AND REPLACE SEALANT AROUND STACKS.
5	REMOVE EXISTING METAL PANEL WALLS AND ROOF SYSTEM. REPLACE WITH NEW, SIMLAR, METAL PANEL SYSTEM
6	REMOVE DAMAGED AREA OF CURB. REPLACE WITH NEW.
7	REMOVE EXISTING PARKING DECK WATERPROOFING AS REQUIRED TO ALLOW PAVEMENT REPAIR / REPLACEMENT/ RESURFACE.
8	PAINT NEW PARKING STRIPES, CURBS, DIRECTIONAL ARROWS AND RESTRICTED PATTERNS AT EACH LEVEL.
9	REMOVE ITEMS NO LONGER IN SERVICE, COMPLETELY. REPAIR AREAS TO MATCH ADJACENT SURFACES.
10	VERIFY DRAIN SYSTEM IS IN WORKING ORDER. PROVIDE WATER JET CLEANING FOR ENTIRE STORM DRAINAGE SYSTEM. REPAIR OR REPLACE ANY DAMAGED DRAINS OR DRAIN COVERS.
11	REMOVE EXISTING METAL SIDING AND ASSOCIATED ITEMS COMPLETELY. PATCH/REPAIR CONCRETE AS NEEDED.
12	REMOVE AND REPLACE EXISTING DAMPER. EXISTING LOUVER TO REMAIN, CLEAN AND PAINT.
13	EVALUATE ROOF CONDITION. REPLACE / REPAIR AS REQUIRED WITH MEMBRANE SYSTEM.

GARAGE PLAN KEY NOTES

ITEM	NOTE
14	REPLACE LIGHT FIXTURES W/ NEW.
15	EVALUATE EXISTING HANDRAILINGS. PROVIDE OPTIONS TO REMAIN, REPLACE, OR AMEND TO MEET CODE.
16	REPLACE DOOR FRAME, LEAF AND HARDWARE IN THEIR ENTIRETY. NEW HARDWARE TO MATCH EXISTING IN FUNCTION.
17	INSTALL LADDER SECURITY DOOR.
18	REPLACE/ INSTALL COMPLIANT HANDRAILS.
19	REPAIR OR REPLACE EXISTING CEILING & WALL MOUNTED POWERED WAYFINDING SIGNAGE THROUGHOUT.
20	REPLACE EXPANSION JOINT MATERIAL. EVALUATE CONDITION OF METAL TRACKS AS EXISTS. REPLACE AS REQUIRE.
21	REMOVE O.H. DOOR, TRACK AND ASSOCIATED ITEMS COMPLETELY. REPAIR/PATCH CONCRETE AS NEEDED.
22	REMOVE EXISTING RAILS. REPLACE W/ NEW TO MEET CODE. SEE DETAIL 1/A5.01
23	PROVIDE GUARDRAILING BETWEEN LEVELS. SEE DETAIL 2/A5.01
24	PROVIDE BALANCE DAMPER BEHIND ALL EXHAUST GRILLES TO ALLOW FOR EQUAL BALANCING OF EXHAUST LEVELS. CLEAN & PAINT GRILLE ASSEMBLY OR REPLACE AS NEEDED.
25	REPLACE EXHAUST FAN SERVING ELECTRICAL SWITCHGEAR ROOM. PROVIDE NEW IN-LINE FAN SIZED FOR 1,500 CFM.
26	PROVIDE NEW HANDICAP PARKING SIGNAGE 60" ABOVE PARKING AREA. SEE DETAIL 3/A5.01
27	REMOVE EXISTING ACCESSIBILITY SIGNAGE.
28	CLEAN AND PAINT MECHANICAL CURBS, SUPPORTS, AND UNITS TO REMAIN.
29	REPLACE EXISTING EXPANSION COVER. EVALUATE EXPANSION MATERIAL. REPLACE AS REQUIRED.

GARAGE PLAN KEY NOTES

ITEM	NOTE
30	REMOVE ALL EXISTING STEAM RADIATORS AND REPLACE W/ 5KW ELECTRIC HEATER @ BOTTOM LEVEL.
31	EXISTING COOLANT LINES SERVING EMEGENCY GENERATORS TO REMAIN.
32	EXISTING PANELS TO REMAIN TO SERVE NEW AND EXISTING LIGHTING AND EQUIPMENT. PROVIDE BID ALTERNATE PRICING TO REPLACE PANELS AND FEEDERS IN THEIR ENTIRETY BACK TO DISTRIBUTION PANELS.
34	REMOVE OR ABANDON IN PLACE EXISTING FANS PREVIOUSLY SERVING THE PAINT BOOTH.
35	EXISTING AIR-COOLED CONDENSING UNITS SERVINIG EMERGENCY GENERATORS TO REMAIN. CONTRACTOR TO INCLUDE BID ALTERNATE PRICING TO REPAIR UNITS TO BRING INTO FULL WORKING ORDER.
36	REMOVE EXISTING UNIT HEATER AND COOLING UNIT. REPLACE BOTH WITH NEW.
37	REPLACE EXISTING EXHAUST FAN W/ NEW 27,500 CFM FAN. PROVIDE ADAPTER CURB AS REQ. VERIFY ELECTRICAL & RECONNECT TO NEW FAN
38	MEP CONTRACTORS TO COORDINATE WITH GENERAL CONTRACTOR TO MEET ALL CODE REQUIREMENTS FOR NEW OR REFURBISHED ELEVATOR EQUIPMENT. THIS SHALL INCLUDE EQUIPMENT POWER FEEDERS, ALONG WITH ANY REQUIREMENTS TO PROVIDE CODE COMPLIANT SHAFT, INCLUDING EXHAUST FAN, SUMP PUMP, LIGHTING AND MISCELLANEOUS POWER REQUIREMENTS.

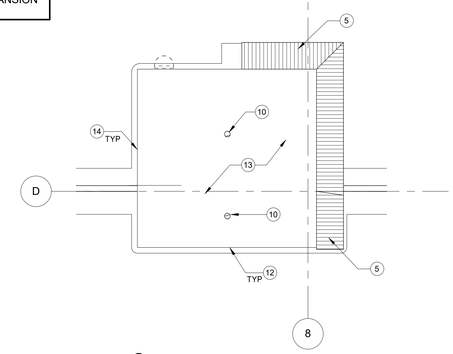

2 Fan Room - Roof Plan
A1.10G 3/32" = 1'-0"

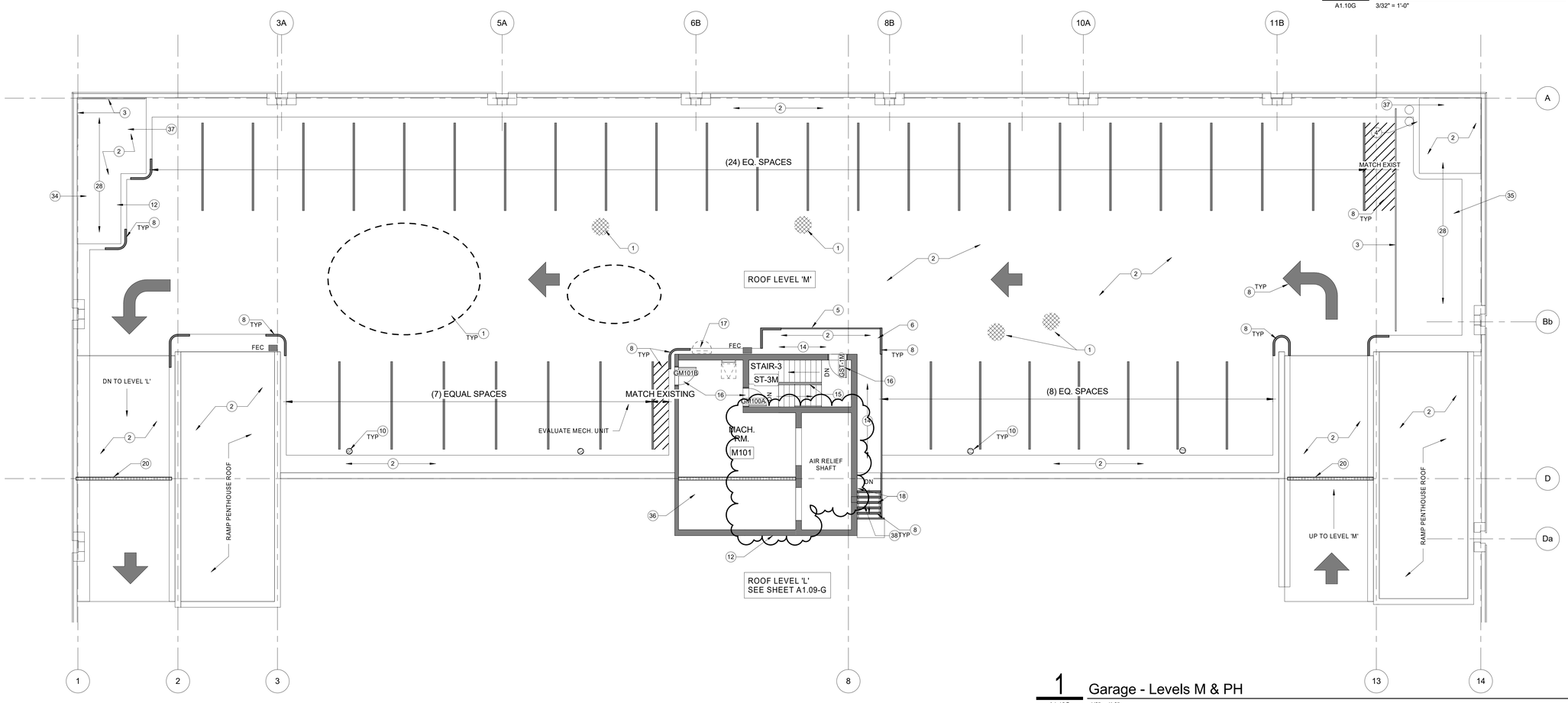

1 Garage - Levels M & PH
A1.10G 1/8" = 1'-0"

BROWNING DAY MULLINS DIERDORF
LEADERSHIP + DESIGN®

Browning Day Mullins Dierdorf Architects
Architecture
Landscape Architecture
Planning
Interior Design
626 North Illinois Street
Indianapolis, Indiana 46204
Phone: (317) 635-5030
Website: www.bdmd.com

Delta Quad Holdings, LLC
Owner

Rau Construction Co.
Construction Manager
9101 West 110th Street, Suite 150
Overland Park, Kansas 66210
Phone: (913) 642-6000
Website: www.website.com

Lawson Elser, Inc.
Structural Engineer
650 East Carmel Drive, Suite 150
Carmel, Indiana 46032
Phone: (317) 574-5409
Website: www.lawsonelser.com

Hoss & Brown Engineers, Inc.
MEP Engineer
11205 West 79th Street, Suite 102
Lenexa, Kansas 66214
Phone: (913) 362-9090
Website: www.h-be.com

SK Design Group, Inc.
Civil Engineer
4600 College Boulevard, Suite 100
Overland Park, KS 66211
Phone: (913) 451-1818
Website: www.skdesigngroup.net

Matchline Design Group, LLC
Interior Design
10300 North Central Expressway, Suite 335
Dallas, TX 75231
Phone: (972) 707-0568
Website: www.matchlinedesign.com

GREGORY E. JACOBY REGISTERED No. AR00860208 STATE OF MISSOURI ARCHITECT

CERTIFICATION

Construction Documents
Garage Maintenance

The Grand Reserve

925 Grand Boulevard
Kansas City, MO 64198

Project No.: 18A023
Drawn By: SH,JF
Checked By: SH
Scale: See Drawing
Issue Date: May 3, 2019

REVISION SCHEDULE		
Rev. #	Revision Description	Issue Date
1		

Garage - Levels M & PH

A1.10G

\\vd-uem01\User\Shawf\Revit\Documents\18A023_K.C.Embassy Suites_Garage_R17_jfram.rvt

5/10/2019 11:24:39 AM

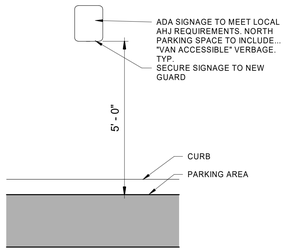

3 ADA SIGNAGE
A5.01G 1/2" = 1'-0"

TYPICAL LEVEL-TO-LEVEL CONDITION
PLAN KEY NOTE 26

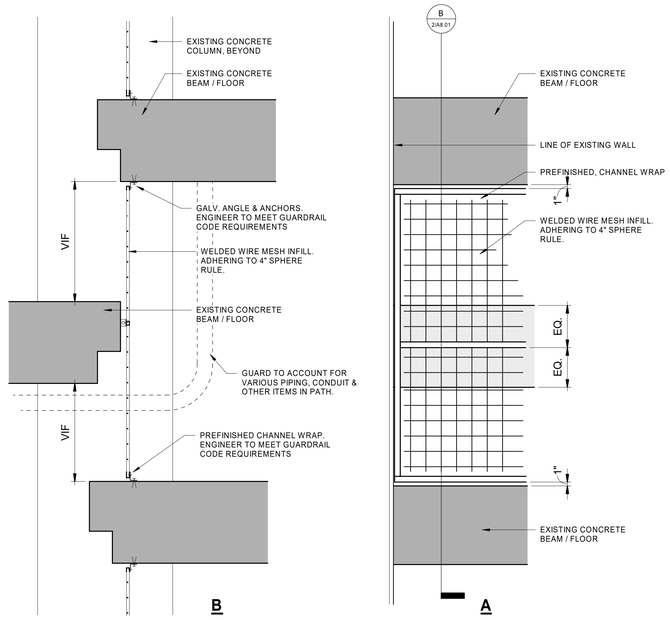

2 TYPICAL LEVEL-TO-LEVEL GUARD
A5.01G 3/4" = 1'-0"

TYPICAL WINDOW DETAIL
LEVELS - 'E', 'G', 'I', & 'K',
PLAN KEY NOTE 26

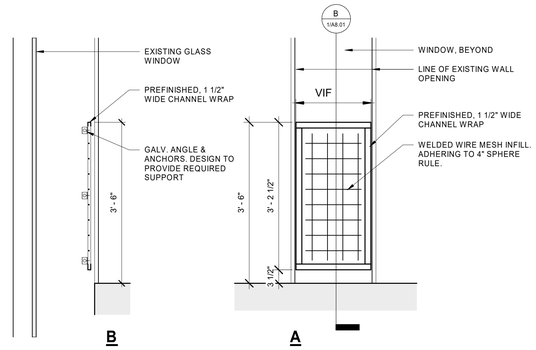

1 TYPICAL WINDOW GUARDRAIL
A5.01G 3/4" = 1'-0"

MAINTENANCE REPAINTING
SUMMARY
A. Section includes maintenance repainting as follows:
1. Removing existing paint, if needed.
2. Patching substrates.
3. Repainting.
PREINSTALLATION MEETINGS
A. Preinstallation Conference: Conduct conference at Project site. To be cordinated with Construction Manager.
PRODUCTS
PREPARATORY CLEANING MATERIALS
A. Water: Potable.
B. Hot Water (if needed): Water heated to a temperature of 140 to 160 deg F.
C. Detergent Solution: Solution prepared by mixing 2 cups of tetrasodium pyrophosphate (TSPP), 1/2 cup of laundry detergent that contains no ammonia, 5 quarts of 5 percent sodium hypochlorite bleach, and 15 quarts of warm water for every 5 gal of solution required.
D. Mildewcide: Commercial proprietary mildewcide or a job-mixed solution prepared by mixing 1/3 cup of household detergent that contains no ammonia, 1 quart of 5 percent sodium hypochlorite bleach, and 3 quarts of warm water.
E. Abrasives for Ferrous Metal Cleaning: Aluminum oxide paper, emery paper, fine steel wool, steel scrapers, and steel-wire brushes of various sizes.
F. Rust Remover: Manufacturer's standard phosphoric acid-based gel formulation, also called "naval jelly," for removing corrosion from iron and steel.
PAINT REMOVERS
A. Alkaline Paste Paint Remover: Manufacturer's standard alkaline paste or gel formulation for removing paint from masonry, stone, wood, plaster, or metal as required to suit Project; and containing no methylene chloride.
B. Low-Odor, Solvent-Type Paste Paint Remover: Manufacturer's standard low-odor, water-rinsable, solvent-type paste, gel, or foamed emulsion formulation for removing paint from masonry, stone, wood, plaster, or metal as required to suit Project; and containing no methanol or methylene chloride.
PAINT, GENERAL
A. Material Compatibility:
1. Provide materials for use within each paint system that are compatible with one another and substrates indicated, under conditions of service and application as demonstrated by manufacturer, based on testing and field experience.
2. For each coat in a paint system, provide products recommended in writing by manufacturers of topcoat for use in paint system and on substrate indicated.
B. Colors: Locations of change in color and graphics are to be duplicated. Actual colors as selected by Architect from full range of industry colors
PAINT MATERIALS, GENERAL
A. MPI Standards: Provide products that comply with MPI standards indicated and that are listed in its "MPI Approved Products List."
B. Transition Coat: Paint manufacturer's recommended coating for use where a residual existing coating is incompatible with the paint system.
PATCHING MATERIALS
A. Wood-Patching Compound: Two-part, epoxy-resin, wood-patching compound; knife-grade formulation as recommended in writing by manufacturer for type of wood repair indicated, tooling time required for the detail of work, and site conditions. Compound shall be designed for filling voids in damaged wood materials that have deteriorated from weathering and decay. Compound shall be capable of filling deep holes and spreading to feather edge.
B. Metal-Patching Compound: Two-part, polyester-resin, metal-patching compound; knife-grade formulation as recommended in writing by manufacturer for type of metal repair indicated, tooling time required for the detail of work, and site conditions. Compound shall be produced for filling metal that has deteriorated from corrosion. Filler shall be capable of filling deep holes and spreading to feather edge.
C. Cementitious Patching Compounds: Cementitious patching compounds and repair materials specifically manufactured for filling cementitious substrates and for sanding or tooling prior to repainting; formulation as recommended in writing by manufacturer for type of cementitious substrate indicated, exposure to weather and traffic, the detail of work, and site conditions.
D. Gypsum-Plaster Patching Compound: Finish coat plaster and bonding compound according to ASTM C842 and manufacturer's written instructions.
EXECUTION
MAINTENANCE REPAINTING, GENERAL
A. Execution of the Work: In repainting surfaces, disturb them as minimally as possible and as follows:
1. Remove failed coatings and corrosion and repaint.
2. Verify that substrate surface conditions are suitable for repainting.
3. Allow other trades to repair items in place before repainting.
B. Mechanical Abrasion: Where mechanical abrasion is needed for the work, use gentle methods, such as scraping and lightly hand sanding, that will not abrade softer substrates, reducing clarity of detail.
C. Heat Processes: Do not use torches, heat guns, or heat plates.
EXAMINATION
A. Examine substrates and conditions, with Installer present, for compliance with requirements for maximum moisture content and other conditions affecting performance of painting work. Comply with paint manufacturer's written instructions for inspection.
B. Maximum Moisture Content of Substrates: Do not begin application of coatings unless moisture content of exposed surface is below the maximum value recommended in writing by paint manufacturer and not greater than the following maximum values when measured with an electronic moisture meter appropriate to the substrate material:
1. Concrete: 12 percent.
2. Gypsum Board: 12 percent.
3. Gypsum Plaster: 12 percent.
4. Masonry (Clay and CMU): 12 percent.
5. Portland Cement Plaster: 12 percent.
6. Wood: 15] percent.
C. Alkalinity: Do not begin application of coatings unless surface alkalinity is within range recommended in writing by paint manufacturer. Conduct alkali testing with litmus paper on exposed plaster, cementitious, and masonry surfaces.
PREPARATORY CLEANING
A. General: Use the gentlest, appropriate method necessary to clean surfaces in preparation for painting. Clean all surfaces, corners, contours, and interstices.
B. Detergent Cleaning: Wash surfaces by hand using clean rags, sponges, and bristle brushes. Scrub surface with detergent solution and bristle brush until soil is thoroughly dislodged and can be removed by rinsing. Use small brushes to remove soil from joints and crevices. Dip brush in solution often to ensure that adequate fresh detergent is used and that surface remains wet. Rinse with water applied by clean rags or sponges.
C. Solvent Cleaning: Use solvent cleaning to remove oil, grease, smoke, tar, and asphalt from painted or unpainted surfaces before other preparation work. Wipe surfaces with solvent using clean rags and sponges. If necessary, spot-solvent cleaning may be employed just prior to commencement of paint application, provided enough time is allowed for complete evaporation. Use clean solvent and clean rags for the final wash to ensure that all foreign materials have been removed. Do not use solvents, including primer thinner and turpentine, that leave residue.
D. Mildew: Clean off existing mildew, algae, moss, plant material, loose paint, grease, dirt, and other debris by scrubbing with bristle brush or sponge and detergent solution. Scrub mildewed areas with mildewcide. Rinse with water applied by clean rags or sponges.
E. Chemical Rust Removal:
1. Remove loose rust scale with specified abrasives for ferrous-metal cleaning.
2. Apply rust remover with brushes or as recommended in writing by manufacturer.
3. Allow rust remover to remain on surface for period recommended in writing by manufacturer or as determined by preconstruction testing. Do not allow extended dwell time.
4. Wipe off residue with mineral spirits and either steel wool or soft rags, or clean with method recommended in writing by manufacturer to remove residue.
5. Dry immediately with clean, soft cloths. Follow direction of grain in metal.
6. Prime immediately to prevent rust. Do not touch cleaned metal surface until primed.
F. Mechanical Rust Removal:
1. Remove rust with specified abrasives for ferrous-metal cleaning. Clean to bright metal.
2. Wipe off residue with mineral spirits and either steel wool or soft rags.
3. Dry immediately with clean, soft cloths. Follow direction of grain in metal.
4. Prime immediately to prevent rust. Do not touch cleaned metal surface until primed.
PAINT REMOVAL
A. General: Remove paint where indicated. Where cleaning methods have been attempted and further removal of the paint is required because of incompatible or unsatisfactory surfaces for repainting, remove paint to extent required by conditions.
1. Brushes: Use brushes that are resistant to chemicals being used.
a. Metal Substrates: If using wire brushes on metal, use brushes of same metal composition as metal being treated.
b. Wood Substrates: Do not use wire brushes.
2. Spray Equipment: Use spray equipment that provides controlled application at volume and pressure indicated, measured at nozzle. Adjust pressure and volume to ensure that spray methods do not damage surfaces.
a. Equip units with pressure gages.
b. Unless otherwise indicated, hold spray nozzle at least 6 inches from surface and apply material in horizontal, back-and-forth sweeping motion, overlapping previous strokes to produce uniform coverage.
c. For chemical spray application, use low-pressure tank or chemical pump suitable for chemical indicated, equipped with nozzle having a cone-shaped spray.
d. For water-spray application, use fan-shaped spray tip that disperses water at an angle of 25 to 50 degrees.
e. For heated water-spray application, use equipment capable of maintaining temperature between 140 and 160 deg F at flow rates indicated.
B. Paint Removal with Hand Tools: Remove paint manually using hand-held scrapers, wire brushes, sandpaper, and metallic wool as appropriate for the substrate material.
SUBSTRATE REPAIR
A. General: Repair substrate surface defects that are inconsistent with the surface appearance of adjacent materials and finishes.
B. Wood Substrate:
1. Repair wood defects including dents and gouges more than 1/2 inch in size and all holes and cracks by filling with wood-patching compound and sanding smooth. Reset or remove protruding fasteners.
2. Where existing paint is allowed to remain, sand irregular buildup of paint, runs, and sags to achieve a uniformly smooth surface.
C. Cementitious Material Substrate:
1. General: Repair defects including dents and chips more than 1/2 inch in size and all holes and cracks by filling with cementitious patching compound and sanding smooth. Remove protruding fasteners.
2. New and Bare Plaster: Neutralize surface of plaster with mild acid solution as recommended in writing by paint manufacturer. In lieu of acid neutralization, follow manufacturer's written instruction for primer or transition coat over alkaline plaster surfaces.
3. Concrete, Cement Plaster, and Other Cementitious Products: Remove efflorescence, chalk, dust, dirt, grease, oils, and release agents. If surfaces are too alkaline to paint, correct this condition before painting.
D. Gypsum-Plaster and Gypsum-Board Substrates:
1. Repair defects including dents and chips more than 1/4 inch in size and all holes and cracks by filling with gypsum-plaster patching compound and sanding smooth. Remove protruding fasteners.
2. Rout out surface cracks to remove loose, unsound material; fill with patching compound and sand smooth.
E. Metal Substrate:
1. Preparation: Treat repair locations by wire-brushing and solvent cleaning. Use chemical or mechanical rust removal method to clean off rust.
2. Defects in Metal Surfaces: Repair non-load-bearing defects in existing metal surfaces, including dents and gouges more than 1/8 inch deep or 1/2 inch across and all holes and cracks by filling with metal-patching compound and sanding smooth. Remove burrs and protruding fasteners.
3. Priming: Prime iron and steel surfaces immediately after repair to prevent flash rusting. Stripe paint corners, crevices, bolts, welds, and sharp edges. Apply two coats to surfaces that are inaccessible after completion of the Work.
PAINT APPLICATION, GENERAL
A. Prepare surfaces to be painted according to the Surface-Preparation Schedule and with manufacturer's written instructions for each substrate condition.
B. Apply a transition coat over incompatible existing coatings.
C. Metal Substrate: Stripe paint corners, crevices, bolts, welds, and sharp edges before applying full coat. Apply two coats to surfaces that are inaccessible after completion of the Work. Tint stripe coat different than the main coating and apply with brush.
D. Blending Painted Surfaces: When painting new substrates patched into existing surfaces or touching up missing or damaged finishes, apply coating system specified for the specific substrate. Apply final finish coat over entire surface from edge to edge and corner to corner.
CLEANING AND PROTECTION
A. At end of each workday, remove rubbish, empty cans, rags, and other discarded materials from Project site.
B. Protect work of other trades against damage from paint application. Correct damage to work of other trades by cleaning, repairing, replacing, and refinishing, as approved by Architect, and leave in an undamaged condition.
C. At completion of construction activities of other trades, touch up and restore damaged or defaced painted surfaces.
SURFACE-PREPARATION SCHEDULE
A. General: Before painting, prepare surfaces for painting according to applicable requirements specified in this schedule.
1. Examine surfaces to evaluate each surface condition according to paragraphs below.
2. Where existing degree of soiling prevents examination, preclean surface and allow it to dry before making an evaluation.
3. Repair substrate defects according to "Substrate Repair" Article.
B. Surface Preparation for MPI DSD 0 Degree of Surface Degradation:
1. Surface Condition: Existing paint film in good condition and tightly adhered.
2. Paint Removal: Not required.
3. Preparation for Painting: Wash surface by detergent cleaning; use solvent cleaning where needed. Roughen or degloss cleaned surfaces to ensure paint adhesion according to paint manufacturer's written instructions.
C. Surface Preparation for MPI DSD 1 Degree of Surface Degradation:
1. Surface Condition: Paint film cracked or broken but adhered.
2. Paint Removal: Scrape by hand-tool cleaning methods to remove loose paint until only tightly adhered paint remains.
3. Preparation for Painting: Wash surface by detergent cleaning; use other cleaning methods for small areas of bare substrate if required. Roughen, degloss, and sand the cleaned surfaces to ensure paint adhesion and a smooth finish according to paint manufacturer's written instructions.
D. Surface Preparation for MPI DSD 2 Degree of Surface Degradation:
1. Surface Condition: Paint film loose, flaking, or peeling.
2. Paint Removal: Remove loose, flaking, or peeling paint film by hand-tool or chemical paint-removal methods.
3. Preparation for Painting: Wash surface by detergent cleaning; use solvent cleaning where needed. Use other cleaning methods for small areas of bare substrate if required. Sand surfaces to smooth remaining paint film edges. Prepare bare cleaned surface to be painted according to paint manufacturer's written instructions for substrate construction materials.
E. Surface Preparation for MPI DSD 3 Degree of Surface Degradation:
1. Surface Condition: Paint film severely deteriorated, obscuring fine architectural detail work because of paint-layer buildup, and surface indicated to have paint completely removed.
2. Paint Removal: Completely remove paint film by hand-tool or chemical paint-removal methods. Remove rust.
3. Preparation for Painting: Prepare bare cleaned surface according to paint manufacturer's written instructions for substrate construction materials.
F. Surface Preparation for MPI DSD 4 Degree of Surface Degradation:
1. Surface Condition: Missing material, small holes and openings, and deteriorated or corroded substrate.
2. Substrate Preparation: Repair, replace, and treat substrate according to "Substrate Repair" Article.
3. Preparation for Painting: Sand substrate surfaces to smooth remaining paint film edges and prepare according to paint manufacturer's written instructions for substrate construction materials. Remove rust.
4. Painting: Paint as required for MPI DSD 2 degree of surface degradation.

BROWNING DAY MULLINS DIERDORF
LEADERSHIP + DESIGN®

Browning Day Mullins Dierdorf Architects
Architecture
Landscape Architecture
Planning
Interior Design
626 North Illinois Street
Indianapolis, Indiana 46204
Phone: (317) 635-5030
Website: www.bdmd.com

Delta Quad Holdings, LLC
Owner

Rau Construction Co.
Construction Manager
9101 West 110th Street, Suite 150
Overland Park, Kansas 66210
Phone: (913) 642-6000
Website: www.website.com

Lawson Elser, Inc.
Structural Engineer
650 East Carmel Drive, Suite 150
Carmel, Indiana 46032
Phone: (317) 574-5409
Website: www.lawsonelser.com

Hoss & Brown Engineers, Inc.
MEP Engineer
11205 West 79th Street, Suite 102
Lenexa, Kansas 66214
Phone: (913) 362-9090
Website: www.h-be.com

SK Design Group, Inc.
Civil Engineer
4600 College Boulevard, Suite 100
Overland Park, KS 66211
Phone: (913) 451-1818
Website: www.skdesigngroup.net

Matchline Design Group, LLC
Interior Design
10300 North Central Expressway, Suite 335
Dallas, TX 75231
Phone: (972) 707-0568
Website: www.matchlinedesign.com

CERTIFICATION

Construction Documents
Garage Maintenance

The Grand Reserve

925 Grand Boulevard
Kansas City, MO 64198

Project No.: 18A023
Drawn By: Author
Checked By: Checker
Scale: See Drawing
Issue Date: May 3, 2019

REVISION SCHEDULE		
Rev. #	Revision Description	Issue Date

Garage - Misc. Details

A5.01G

\\cd-serv01\UserShare\fram\Documents\18A023_K.C.Embassy Suites_Garage_R17_fram.rvt

5/10/2019 11:24:40 AM

HOLLOW METAL DOOR AND FRAME PERFORMANCE REQUIREMENTS

A. Fire-Rated Door Assemblies: Assemblies complying with NFPA 80 that are listed and labeled by a qualified testing agency acceptable to authorities having jurisdiction for fire-protection ratings and temperature-rise limits, as required by local jurisdictions, based on testing at positive pressure according to NFPA 252 or UL 10C.
   1. Smoke- and Draft-Control Door Assemblies: Listed and labeled for smoke and draft control by a qualified testing agency acceptable to authorities having jurisdiction, based on testing according to UL 1784 and installed in compliance with NFPA 105.
B. Thermally Rated Door Assemblies: Provide door assemblies with U-factor of not more than 0.40 deg Btu/F x h x sq. ft. when tested according to ASTM C518.

EXTERIOR STANDARD STEEL DOORS AND FRAMES

A. All doors and frames for this work are to be equivalent to the following.
B. Construct hollow-metal doors and frames to comply with standards indicated for materials, fabrication, hardware locations, hardware reinforcement, tolerances, and clearances, and as specified.
C. Heavy-Duty Doors and Frames: ANSI/SDI A250.8, Level 2; ANSI/SDI A250.4, Level B.
   1. Doors:
      a. Type: As indicated in the Door and Frame Schedule.
      b. Thickness: 1-3/4 inches.
      c. Face: Metallic-coated steel sheet, minimum thickness of 0.042 inch, with minimum A60 coating.
      d. Edge Construction: Model 1, Full Flush.
      e. Edge Bevel: Provide manufacturer's standard beveled or square edges.
      f. Top Edge Closures: Close top edges of doors with flush closures of same material as face sheets. Seal joints against water penetration.
      g. Bottom Edges: Close bottom edges of doors with end closures or channels of same material as face sheets. Provide weep-hole openings in bottoms of exterior doors to permit moisture to escape.
      h. Core: Manufacturer's standard.
      i. Fire-Rated Core: Manufacturer's standard vertical steel stiffener with insulation or laminated mineral board core for fire-rated doors.
   2. Frames:
      a. Materials: Metallic-coated steel sheet, minimum thickness of 0.053 inch, with minimum A60 coating.
      b. Construction: Full profile welded.

FRAME ANCHORS

A. Jamb Anchors:
   1. Type: Anchors of minimum size and type required by applicable door and frame standard, and suitable for performance level indicated.
   2. Quantity: Minimum of three anchors per jamb, with one additional anchor for frames with no floor anchor. Provide one additional anchor for each 24 inches of frame height above 7 feet.
   3. Postinstalled Expansion Anchor: Minimum 3/8-inch-diameter bolts with expansion shields or inserts, with manufacturer's standard pipe spacer.
B. Material: ASTM A879/A879M, Commercial Steel (CS), 04Z coating designation; mill phosphatized.

MATERIALS

A. Cold-Rolled Steel Sheet: ASTM A1008/A1008M, Commercial Steel (CS), Type B; suitable for exposed applications.
B. Hot-Rolled Steel Sheet: ASTM A1011/A1011M, Commercial Steel (CS), Type B; free of scale, pitting, or surface defects; pickled and oiled.
C. Metallic-Coated Steel Sheet: ASTM A653/A653M, Commercial Steel (CS), Type B.
D. Inserts, Bolts, and Fasteners: Hot-dip galvanized according to ASTM A153/A153M.
E. Mineral-Fiber Insulation: ASTM C665, Type I (blankets without membrane facing); consisting of fibers manufactured from slag or rock wool; with maximum flame-spread and smoke-developed indexes of 25 and 50, respectively; passing ASTM E136 for combustion characteristics.

FABRICATION

A. Door Astragals: Provide overlapping astragal on one leaf of pairs of doors where required by NFPA 80 for fire-performance rating or where indicated. Extend minimum 3/4 inch beyond edge of door on which astragal is mounted or as required to comply with published listing of qualified testing agency.
B. Hollow-Metal Frames: Fabricate in one piece except where handling and shipping limitations require multiple sections. Where frames are fabricated in sections, provide alignment plates or angles at each joint, fabricated of metal of same or greater thickness as frames.
   1. Provide countersunk, flat- or oval-head exposed screws and bolts for exposed fasteners unless otherwise indicated.
   2. Door Silencers: Except on weather-stripped frames, drill stops to receive door silencers as follows. Keep holes clear during construction.
      a. Single-Door Frames: Drill stop in strike jamb to receive three door silencers.
      b. Double-Door Frames: Drill stop in head jamb to receive two door silencers.
C. Hardware Preparation: Factory prepare hollow-metal doors and frames to receive templated mortised hardware, and electrical wiring; include cutouts, reinforcement, mortising, drilling, and tapping according to ANSI/SDI A250.6, the Door Hardware Schedule, and templates.
   1. Reinforce doors and frames to receive nontemplated, mortised, and surface-mounted door hardware.
   2. Comply with BHMA A156.115 for preparing hollow-metal doors and frames for hardware.
D. Glazed Lites: Provide stops and moldings around glazed lites where indicated. Form corners of stops and moldings with butted or mitered hairline joints.
   1. Provide stops and moldings flush with face of door, and with beveled stops unless otherwise indicated.
   2. Multiple Glazed Lites: Provide fixed and removable stops and moldings so that each glazed lite is capable of being removed independently.
   3. Provide fixed frame moldings on outside of exterior and on secure side of interior doors and frames. Provide loose stops and moldings on inside of hollow-metal doors and frames.
   4. Coordinate rabbet width between fixed and removable stops with glazing and installation types indicated.
   5. Provide stops for installation with countersunk flat- or oval-head machine screws spaced uniformly not more than 9 inches o.c. and not more than 2 inches o.c. from each corner.

STEEL FINISHES

A. Prime Finish: Clean, pretreat, and apply manufacturer's standard primer.
   1. Shop Primer: Manufacturer's standard, fast-curing, lead- and chromate-free primer complying with ANSI/SDI A250.10; recommended by primer manufacturer for substrate; compatible with substrate and field-applied coatings despite prolonged exposure.

EXECUTION

PREPARATION

A. Remove welded-in shipping spreaders installed at factory. Restore exposed finish by grinding, filling, and dressing, as required to make repaired area smooth, flush, and invisible on exposed faces. Touch up factory-applied finishes where spreaders are removed.
B. Drill and tap doors and frames to receive nontemplated, mortised, and surface-mounted door hardware.

INSTALLATION

A. Hollow-Metal Frames: Comply with ANSI/SDI A250.11.
   1. Set frames accurately in position; plumbed, aligned, and braced securely until permanent anchors are set. After wall construction is complete, remove temporary braces without damage to completed Work.
      a. Where frames are fabricated in sections, field splice at approved locations by welding face joint continuously; grind, fill, dress, and make splice smooth, flush, and invisible on exposed faces. Touch-up finishes.
      b. Install frames with removable stops located on secure side of opening.
   2. Fire-Rated Openings: Install frames according to NFPA 80.
   3. Floor Anchors: Secure with postinstalled expansion anchors.
   4. In-Place Concrete or Masonry Construction: Secure frames in place with postinstalled expansion anchors. Countersink anchors, and fill and make smooth, flush, and invisible on exposed faces.
   5. Installation Tolerances: Adjust hollow-metal frames to the following tolerances:
      a. Squareness: Plus or minus 1/16 inch, measured at door rabbet on a line 90 degrees from jamb perpendicular to frame head.
      b. Alignment: Plus or minus 1/16 inch, measured at jambs on a horizontal line parallel to plane of wall.
      c. Twist: Plus or minus 1/16 inch, measured at opposite face corners of jambs on parallel lines, and perpendicular to plane of wall.
      d. Plumbness: Plus or minus 1/16 inch, measured at jambs at floor.
B. Hollow-Metal Doors: Fit and adjust hollow-metal doors accurately in frames, within clearances specified below.
   1. Non-Fire-Rated Steel Doors: Comply with ANSI/SDI A250.8 guide specification indicated.
   2. Fire-Rated Doors: Install doors with clearances according to NFPA 80.
   3. Smoke-Control Doors: Install doors according to NFPA 105.
C. Glazing: Comply with installation requirements in Section 088000 "Glazing" and with hollow-metal manufacturer's written instructions.

REPAIR

A. Prime-Coat Touchup: Immediately after erection, sand smooth rusted or damaged areas of prime coat and apply touchup of compatible air-drying, rust-inhibitive primer.
B. Metallic-Coated Surface Touchup: Clean abraded areas and repair with galvanizing repair paint according to manufacturer's written instructions.
C. Touchup Painting: Cleaning and touchup painting of abraded areas of paint are specified in painting Sections.

DOOR HARDWARE PERFORMANCE REQUIREMENTS

A. Fire-Rated Door Assemblies: Where fire-rated doors are indicated, provide door hardware complying with NFPA 80 that is listed and labeled by a qualified testing agency, for fire-protection ratings indicated, based on testing at positive pressure according to NFPA 252 or UL 10C.
B. Smoke- and Draft-Control Door Assemblies: Where smoke- and draft-control door assemblies are required, provide door hardware that complies with requirements of assemblies tested according to UL 1784 and installed in compliance with NFPA 105.
   1. Air Leakage Rate: Maximum air leakage of 0.3 cfm/sq. ft. at the tested pressure differential of 0.3-inch wg of water.
C. Means of Egress Doors: Latches do not require more than 15 lbf to release the latch. Locks do not require use of a key, tool, or special knowledge for operation.
D. Accessibility Requirements: For door hardware on doors in an accessible route, comply with the DOJ's "2010 ADA Standards for Accessible Design" and authorities having jurisdiction.

SCHEDULED DOOR HARDWARE

A. Provide products for each door that comply with requirements indicated in Part 2 and door hardware schedule.
   1. Door hardware is to match existing in function.
   2. All door hardware to be Grade 1, Heavy Duty, or equal.

HINGES

A. Hinges: BHMA A156.1.
B. Antifriction-Bearing Hinges: To be used on all doors.
   1. Mounting: Full mortise (butts).
   2. Bearing Material: Ball bearing.
   3. Grade: 1 (heavy weight).
   4. Base and Pin Metal:
      a. Exterior Hinges: Stainless steel with stainless-steel pin.
      b. Interior Hinges: Stainless steel with stainless-steel pin.
      c. Hinges for Fire-Rated Assemblies: Stainless steel with stainless-steel pin.
   5. Pins: Non-rising loose unless otherwise indicated.
   6. Tips: Flat button.
   7. Corners: Square.

MECHANICAL LOCKS AND LATCHES

A. Lock Functions: As indicated in door hardware schedule.
B. Lock Throw: Comply with testing requirements for length of bolts required for labeled fire doors, and as follows:
   1. Bored Locks: Minimum 1/2-inch latchbolt throw.
   2. Deadbolts: Minimum 1-inch bolt throw.
C. Lock Backset: 2-3/4 inches unless otherwise indicated.
D. Lock Trim:
   1. Description: Similar to Best Access Systems 9K Series.
   2. Levers: Cast.
   3. Escutcheons (Roses): Cast.
   4. Dummy Trim: Match lever lock trim and escutcheons.
E. Strikes: Provide manufacturer's standard strike for each lock bolt or latchbolt complying with requirements indicated for applicable lock or latch and with strike box and curved lip extended to protect frame; finished to match lock or latch.
F. Bored Locks: BHMA A156.2;Grade 1; Series 4000.

AUXILIARY LOCKS

A. Bored Auxiliary Locks: BHMA A156.36: Grade 1; with strike that suits frame.
   1. Backset: 2-3/4 inches.
   2. Material: Stainless steel.
   3. Deadlocks: Deadbolt operated by key outside, no trim inside.

SURFACE BOLTS

A. Surface Bolts: BHMA A156.16.
B. Half-Round Surface Bolts: Grade 1, 6-inch polished-brass or burnished-steel, half-round rod and knob; minimum 7/8-inch throw; with universal strike.
C. Fire-Rated Surface Bolts: Grade 1, 8-inch steel bolt with 2 steel guides; minimum 1-inch throw; listed and labeled for use in fire-rated assemblies; with universal strike.
D. Dustproof Strikes: Grade 1, polished wrought brass, with 3/4-inch-diameter, spring-tension plunger.

EXIT DEVICES AND AUXILIARY ITEMS

A. Exit Devices and Auxiliary Items: BHMA A156.3.
B. Panic Exit Devices: Listed and labeled by a testing and inspecting agency acceptable to authorities having jurisdiction, for panic protection, based on testing according to UL 305.
C. Fire Exit Devices: Devices complying with NFPA 80 that are listed and labeled by a testing and inspecting agency acceptable to authorities having jurisdiction, for fire and panic protection, based on testing according to UL 305 and NFPA 252.
D. Rim Exit Devices: Grade 1.
   1. Type: 1, rim.
   2. Actuating Bar: Push pad.
   3. Material: Stainless steel.
E. Tube-Steel Removable Mullions: With malleable-iron top and bottom retainers, and prepared for strikes as follows:
   1. Strikes: Two standard recessed strikes.
F. Exit Device Outside Trim: Lever with lockset, material and finish to match locksets unless otherwise indicated.
   1. Match design for lock trim unless otherwise indicated.
G. Through-Bolt Fasteners: For exit devices and trim on metal doors.

LOCK CYLINDERS

A. Lock Cylinders: Tumbler type, constructed from brass or bronze, stainless steel, or nickel silver. Provide cylinder from same manufacturer of locking devices]
B. Standard Lock Cylinders: BHMA A156.5;Grade 1 permanent cores; face finished to match lockset.
   1. Core Type: Match existing.
   2. Number of Pins: Match existing.
   3. Lock Type: Bored-lock type.

KEYING

A. Keying System: Factory registered, complying with guidelines in BHMA A156.28, appendix. Provide one extra key blank for each lock.
   1. Existing System:
      a. Master key or grand master key locks to Owner's existing system.
      b. Re-key Owner's existing master key system into new keying system.
   2. Keyed Alike: Key all cylinders to same change key.
B. Keys: Nickel silver or Brass.
   1. Stamping: Permanently inscribe each key with a visual key control number and include the following notation:
      a. Notation: "DO NOT DUPLICATE."

OPERATING TRIM

A. Operating Trim: BHMA A156.6; stainless steel.

ACCESSORIES FOR PAIRS OF DOORS

A. Flat Overlapping Astragals: BHMA A156.22; flat primed steel metal bar, surface mounted on face of door with screws; minimum 1/8 inch thick by 2 inches wide by full height of door.

SURFACE CLOSERS

A. Surface Closers: BHMA A156.4; rack-and-pinion hydraulic type with adjustable sweep and latch speeds controlled by key-operated valves and forged-steel main arm. Comply with manufacturer's written instructions for size of door closers depending on size of door, exposure to weather, and anticipated frequency of use. Provide factory-sized closers, adjustable to meet field conditions and requirements for opening force.
B. Surface Closer with Cover: Grade 1; Modern type with mechanism enclosed in cover.
   1. Mounting: Opposite hinge side.
   2. Type: Regular arm.
   3. Backcheck: Adjustable, effective between 60 and 85 degrees of door opening.
   4. Cover Material: Plated steel.
   5. Closing Power Adjustment: At least 35 percent more than minimum tested value.

MECHANICAL STOPS AND HOLDERS

A. Wall- and Floor-Mounted Stops: BHMA A156.16; polished cast brass, bronze, or aluminum base metal.

OVERHEAD STOPS AND HOLDERS

A. Overhead Stops and Holders: BHMA A156.8.

DOOR GASKETING

A. Door Gasketing: BHMA A156.22; with resilient or flexible seal strips that are easily replaceable and readily available from stocks maintained by manufacturer.
B. Maximum Air Leakage: When tested according to ASTM E283 with tested pressure differential of 0.3-inch wg, as follows:
   1. Smoke-Rated Gasketing: 0.3 cfm/sq. ft. of door opening.
   2. Gasketing on Single Doors: 0.3 cfm/sq. ft. of door opening.
   3. Gasketing on Double Doors: 0.50 cfm per foot of door opening.

THRESHOLDS

A. Thresholds: BHMA A156.21; fabricated to full width of opening.

METAL PROTECTIVE TRIM UNITS

A. Metal Protective Trim Units: BHMA A156.6; fabricated from 0.050-inch-thick stainless steel; with manufacturer's standard machine or self-tapping screw fasteners.

AUXILIARY DOOR HARDWARE

A. Auxiliary Hardware: BHMA A156.16.

FINISHES

A. Provide finishes complying with BHMA A156.18 – US26D.

INSTALLATION

A. Mounting Heights: Mount door hardware units at heights to comply with the following unless otherwise indicated or required to comply with governing regulations.
   1. Standard Steel Doors and Frames: ANSI/SDI A250.8.
B. Install each door hardware item to comply with manufacturer's written instructions. Where cutting and fitting are required to install door hardware onto or into surfaces that are later to be painted or finished in another way, coordinate removal, storage, and reinstallation of surface protective trim units with finishing work. Do not install surface-mounted items until finishes have been completed on substrates involved.
C. Hinges: Install types and in quantities indicated in door hardware schedule, but not fewer than the number recommended by manufacturer for application indicated or one hinge for every 30 inches of door height, whichever is more stringent, unless other equivalent means of support for door, such as spring hinges or pivots, are provided.
D. Lock Cylinders: Install construction cores to secure building and areas during construction period.
   1. Furnish permanent cores to Owner for installation.
E. Key Control Cabinet: Tag keys and place them on markers and hooks in key control system
F. Thresholds: Set thresholds for exterior doors and other doors indicated in full bed of sealant."
G. Stops: Provide floor stops for doors unless wall or other type stops are indicated in door hardware schedule. Do not mount floor stops where they will impede traffic.
H. Perimeter Gasketing: Apply to head and jamb, forming seal between door and frame.
   1. Do not notch perimeter gasketing to install other surface-applied hardware.
I. Meeting Stile Gasketing: Fasten to meeting stiles, forming seal when doors are closed.
J. Door Bottoms: Apply to bottom of door, forming seal with threshold when door is closed.

ADJUSTING

A. Adjust and check each operating item of door hardware and each door to ensure proper operation or function of every unit. Replace units that cannot be adjusted to operate as intended. Adjust door control devices to compensate for final operation of heating and ventilating equipment and to comply with referenced accessibility requirements.

GARAGE DOOR SCHEDULE

Mark	SIZE Width	SIZE Height	SIZE Thick.	DOOR Mat.	DOOR Fin.	DOOR Elev.	FRAME Mat.	FRAME Fin.	FRAME Elev.	Fire Rtg.	Hdwr. Set	Comments
GA100A	3' - 0"	7' - 0"	1 3/4"	IHM	PT	TME	HM	PT	TME		TME	
GA100B	16' - 0"	7' - 6"	2"	MTL							TME	EXISTING TO REMAIN. REPAIR AS REQUIRED.
GA100C	27' - 6"	7' - 6"	2"	MTL							TME	EXISTING TO REMAIN. REPAIR AS REQUIRED.
GA100D	3' - 0"	7' - 0"	1 3/4"	ALUM							TME	EXISTING TO REMAIN. REPAIR AS REQUIRED.
GA100E	3' - 0"	7' - 0"	1 3/4"	IHM	PT	TME	HM	PT	TME		TME	
GA101A	6' - 0"	7' - 0"	1 3/4"	IHM	PT	TME	HM	PT	TME		TME	
GA102A	3' - 0"	7' - 0"	1 3/4"	ALUM							TME	EXISTING TO REMAIN. REPAIR AS REQUIRED.
GA103A	3' - 0"	7' - 0"	1 3/4"	IHM	PT	TME	HM	PT	TME		TME	
GB101A	3' - 0"	7' - 0"	1 3/4"	HM	PT	TME	HM	PT	TME		TME	
GB102A	3' - 0"	7' - 0"	1 3/4"	HM	PT	TME	HM	PT	TME		TME	
GB103A	3' - 0"	7' - 0"	1 3/4"	HM	PT	TME	HM	PT	TME		TME	
GB103B	8' - 0"	7' - 0"	2"	MTL							TME	EXISTING TO REMAIN. REPAIR AS REQUIRED.
GD101A	3' - 0"	7' - 0"	1 3/4"	HM	PT	TME	HM	PT	TME		TME	
GD102A	3' - 0"	7' - 0"	1 3/4"	HM	PT	TME	HM	PT	TME		TME	
GF101A	3' - 0"	7' - 0"	1 3/4"	HM	PT	TME	HM	PT	TME		TME	
GF102A	3' - 0"	7' - 0"	1 3/4"	HM	PT	TME	HM	PT	TME		TME	
GH101A	3' - 0"	7' - 0"	1 3/4"	HM	PT	TME	HM	PT	TME		TME	
GH102A	3' - 0"	7' - 0"	1 3/4"	HM	PT	TME	HM	PT	TME		TME	
GJ101A	3' - 0"	7' - 0"	1 3/4"	HM	PT	TME	HM	PT	TME		TME	
GJ102A	3' - 0"	7' - 0"	1 3/4"	HM	PT	TME	HM	PT	TME		TME	
GL100A	15' - 4"	7' - 6"	1 1/2"	MTL							TME	EXISTING TO REMAIN. REPAIR AS REQUIRED.
GL100B	14' - 5"	7' - 6"	1 1/2"	MTL							TME	EXISTING TO REMAIN. REPAIR AS REQUIRED.
GL101A	3' - 0"	7' - 0"	1 3/4"	IHM	PT	TME	HM	PT	TME		TME	
GM100A	3' - 0"	7' - 0"	1 3/4"	HM	PT	TME	HM	PT	TME	90 MIN	TME	
GM101B	3' - 0"	7' - 0"	1 3/4"	IHM	PT	TME	HM	PT	TME		TME	
GST-1A	3' - 0"	7' - 0"	1 3/4"	IHM	PT	TME	HM	PT	TME	90 MIN	TME	
GST-1B	3' - 0"	7' - 0"	1 3/4"	IHM	PT	TME	HM	PT	TME		TME	
GST-1C	3' - 0"	7' - 0"	1 3/4"	HM	PT	TME	HM	PT	TME	90 MIN	TME	
GST-1E	3' - 0"	7' - 0"	1 3/4"	HM	PT	TME	HM	PT	TME	90 MIN	TME	
GST-1G	3' - 0"	7' - 0"	1 3/4"	HM	PT	TME	HM	PT	TME	90 MIN	TME	
GST-1I	3' - 0"	7' - 0"	1 3/4"	HM	PT	TME	HM	PT	TME	90 MIN	TME	
GST-1K	3' - 0"	7' - 0"	1 3/4"	HM	PT	TME	HM	PT	TME	90 MIN	TME	
GST-1M	3' - 0"	7' - 0"	1 3/4"	IHM	PT	TME	HM	PT	TME	90 MIN	TME	
GST-2A	3' - 0"	7' - 0"	1 3/4"	IHM	PT	TME	HM	PT	TME	90 MIN	TME	
GST-2B	3' - 0"	7' - 0"	1 3/4"	IHM	PT	TME	HM	PT	TME		TME	REATTACH DECORATIVE GRILLE
GST-2C	3' - 0"	7' - 0"	1 3/4"	HM	PT	TME	HM	PT	TME	90 MIN	TME	
GST-2E	3' - 0"	7' - 0"	1 3/4"	HM	PT	TME	HM	PT	TME	90 MIN	TME	
GST-2G	3' - 0"	7' - 0"	1 3/4"	HM	PT	TME	HM	PT	TME	90 MIN	TME	
GST-2I	3' - 0"	7' - 0"	1 3/4"	HM	PT	TME	HM	PT	TME	90 MIN	TME	
GST-2K	3' - 0"	7' - 0"	1 3/4"	HM	PT	TME	HM	PT	TME	90 MIN	TME	
GST-3B	3' - 0"	7' - 0"	1 3/4"	HM	PT	TME	HM	PT	TME	90 MIN	TME	
GST-3C	3' - 0"	7' - 0"	1 3/4"	HM	PT	TME	HM	PT	TME	90 MIN	TME	PROVIDE 'WATCH YOUR STEP' SIGNAGE
GST-3D	3' - 0"	7' - 0"	1 3/4"	HM	PT	TME	HM	PT	TME	90 MIN	TME	
GST-3E	3' - 0"	7' - 0"	1 3/4"	HM	PT	TME	HM	PT	TME	90 MIN	TME	PROVIDE 'WATCH YOUR STEP' SIGNAGE
GST-3F	3' - 0"	7' - 0"	1 3/4"	HM	PT	TME	HM	PT	TME	90 MIN	TME	
GST-3G	3' - 0"	7' - 0"	1 3/4"	HM	PT	TME	HM	PT	TME	90 MIN	TME	PROVIDE 'WATCH YOUR STEP' SIGNAGE
GST-3H	3' - 0"	7' - 0"	1 3/4"	HM	PT	TME	HM	PT	TME	90 MIN	TME	
GST-3I	3' - 0"	7' - 0"	1 3/4"	HM	PT	TME	HM	PT	TME	90 MIN	TME	PROVIDE 'WATCH YOUR STEP' SIGNAGE
GST-3J	3' - 0"	7' - 0"	1 3/4"	HM	PT	TME	HM	PT	TME	90 MIN	TME	
GST-3K	3' - 0"	7' - 0"	1 3/4"	HM	PT	TME	HM	PT	TME	90 MIN	TME	PROVIDE 'WATCH YOUR STEP' SIGNAGE

BROWNING DAY MULLINS DIERDORF
LEADERSHIP + DESIGN®

Browning Day Mullins Dierdorf Architects
Architecture
Landscape Architecture
Planning
Interior Design
626 North Illinois Street
Indianapolis, Indiana 46204
Phone: (317) 635-5030
Website: www.bdmd.com

Delta Quad Holdings, LLC
Owner

Rau Construction Co.
Construction Manager
9101 West 110th Street, Suite 150
Overland Park, Kansas 66210
Phone: (913) 642-6000
Website: www.website.com

Lawson Elser, Inc.
Structural Engineer
650 East Carmel Drive, Suite 150
Carmel, Indiana 46032
Phone: (317) 574-5409
Website: www.lawsonelser.com

Hoss & Brown Engineers, Inc.
MEP Engineer
11205 West 79th Street, Suite 102
Lenexa, Kansas 66214
Phone: (913) 362-9090
Website: www.h-be.com

SK Design Group, Inc.
Civil Engineer
4600 College Boulevard, Suite 100
Overland Park, KS 66211
Phone: (913) 451-1818
Website: www.skdesigngroup.net

Matchline Design Group, LLC
Interior Design
10300 North Central Expressway, Suite 335
Dallas, TX 75231
Phone: (972) 707-0568
Website: www.matchlinedesign.com

GREGORY E. JACOBY REGISTERED No. AR00860208 STATE OF MISSOURI ARCHITECT

CERTIFICATION

Construction Documents
Garage Maintenance

The Grand Reserve

925 Grand Boulevard
Kansas City, MO 64198

Project No.: 18A023
Drawn By: SH, JF
Checked By: SH
Scale: See Drawing
Issue Date: May 3, 2019

REVISION SCHEDULE		
Rev. #	Revision Description	Issue Date

Garage - Door Details

A8.01G

BID NARRATIVE REQUIREMENTS:

The items included in this narrative are based on good design practices. Documents provided are for pricing only. Contractors bid shall include engineering services to provide a permit set of documents for the systems being provided. Should any contractor deviate from these requirements and those deviated items are required in the construction, the costs shall be borne by the contractor.

Codes and Standards

- 2012 International Building Code
- 2012 International Mechanical Code
- 2012 Uniform Plumbing Code
- 2012 International Fuel Gas Code
- 2012 International Fire Code
- 2012 International Energy Conservation Code
- 2014 National Electric Code
- ASHRAE 62.1, Ventilation for Acceptable Indoor Air Quality
- ASHRAE 90.1, Energy Standard for Buildings
-

General MEP Specifications

The contract includes all labor, material, and equipment required for the complete systems as shown and specified. Provide all devices and accessories as necessary for complete and working systems.

The contractors shall become familiar with the work of all other trades and shall fully coordinate their work prior to ordering equipment or installation of systems.

The materials, products and equipment described in these specifications or on the drawings establish a standard of required function, dimension, appearance, and quality to be met by any proposed substitution. Listing of these manufacturers shall in no way be construed as a device intended to limit the bidders to those specifically listed.

Reference to any article, device, product, material, fixture, form or type of construction by name, make, or catalog number, shall be interpreted as having established a standard of quality and shall not be construed as limiting competition. Articles, fixtures, etc. of equal quality by manufacturers listed in this specification for the applicable use, shall be acceptable, subject to performance, spatial, structural, and electrical constraints of the project design. The Engineer reserves last opinion as to a product's equality or superiority to that specified.
Submittals: Provide submittals in PDF format for all equipment and major materials supplied and shall include: manufacturer, model number, materials and miscellaneous data as required to describe the equipment; capacity, voltage, phase, ampacity and other miscellaneous data to quantify the size of the equipment; dimensional drawings showing layout, connection points and detailed layout of components; electrical full load amps and minimum circuit ampacities; and other pertinent information needed for complete review by the engineer. Conspicuously mark on each submittal the exact model, fittings, accessories, and devices to be supplied. Tags for equipment submitted shall match the tags indicated on the design drawings or specifications.

Where equipment is noted on the drawings and not scheduled, refer to plan note and sheet number on the submittal. Contractor shall check all submittals to verify that they meet the requirements of the drawings and specifications before forwarding to the architect and engineer. All submittals shall bear the stamp of the contractor to show that they have been reviewed in detail. No work shall be fabricated, and no equipment ordered until the architect and engineer have returned acceptable reviewed submittals.

Operation and Maintenance (O&M) Manuals: Before project close-out, the contractor shall submit O&M manuals for all equipment provided in this section. The O&M manuals shall include installation, operation, maintenance instructions, diagrams, capacities, spare part numbers, warranties, guarantees, etc. Provide a list of emergency service organizations for each piece of equipment. Keep in a safe place all keys, wrenches and other specialty tools furnished with equipment. Provide three hard copies in binders logically organized, divided and tabbed. Provide all data in electronic PDF format on three flash drives organized and bookmarked similar to the hard copy binders.

Locations of equipment, piping, and other work are indicated diagrammatically on the drawings. Each contractor shall coordinate exact locations subject to structural conditions, work of other contractors, access requirements, and the approval of the architect and engineer.

Drawings and specifications indicate minimum construction standards, but should any work indicated be sub-standard, to any ordinances, laws, codes, rules, or regulations bearing on work, the contractor shall execute work in accordance with such without increased cost to the owner, but not until he has referred such variances to the engineer.

The contractors shall secure and pay for the necessary permits and certificates of inspection for their trade. Keep record of all permits and inspections and submit two copies to the engineer with request for final inspection.

This contractor shall warrant that the complete systems installed under this contract shall be free of defects in workmanship and materials for a period of one (1) year from the date of substantial completion by the arch/owner. If defects occur during the one year guarantee period, this contractor shall repair or replace such defects at no expense to the owner and to the satisfaction of the owner and engineer.

Adequately protect equipment from damage after delivery to the jobsite. Cover with heavy polyethylene plastic. Elevate equipment when there is danger of water damage. Equipment damaged will be rejected.

Any scratches to factory finishes shall be touched up using factory supplied paint before final acceptance. If extensive damage to factory finishes has occurred, equipment panels shall be replaced to the satisfaction of the engineer.

Install all equipment in strict accordance with the manufacturer's recommendations and the shop drawings reviewed by the Engineer. The complete installation shall function as designed and intended with respect to efficiency, capacity, and noise level, etc. Any abnormal noise caused by rattling equipment, conduit or fixtures will not be acceptable.

Contractor shall perform initial start-up of systems and provide necessary supervision and labor to make the first seasonal change-over of systems. Owner's personnel shall be present during change-over.
It is the contractor's responsibility to provide materials and trim which fit properly the types of ceiling, wall or floor finishes actually installed. Model numbers in specifications or shown on drawings are not intended to designate the required trim.

Contractor shall provide all miscellaneous steel, etc., for the proper installation of the systems specified and/or indicated on the plans. Any item connecting to building structure shall be done in a manner accepted by the structural engineer. When bar joists are used for steel construction, items shall be supported from angle iron spanning the top chord of the joists.

Periodically during construction and prior to Owner acceptance of the building, Contractor shall remove from the premises and dispose of all packing material and debris.

Before submitting a bid, the Contractor shall visit the actual location of the job and shall fully understand the scope of the work to be performed and the conditions under which it is to be performed. In no case shall additional compensation be granted when existing conditions could reasonably be determined.

Any work that will affect the building occupants in any way shall be coordinated with that tenant. Such work shall be performed in a satisfactory manner to those affected.

Locate and mark all known utilities prior to proceeding with work. Proceed with caution since unmarked utilities may exist on site. Should any existing utilities be damaged or disrupted, immediately notify owner and repair to existing conditions.

The Contractor shall closely coordinate utility downtime with the Owner and Architect giving a minimum fourteen day notice prior to downtime. Downtimes are to be held to a minimum with the Owner being notified as to the extent and duration. Work shall be performed only after approval by the owner.

The Electrical Contractor shall provide all conduit and wiring and shall connect complete and ready for operation all electrical motors and equipment in the other contracts. The other contractors shall furnish to the Electrical Contractor switches, electrical controls and other accessories required. Installation of motors, equipment, etc., shall be made by the Contractor furnishing the equipment, unless otherwise indicated.

Unless integral to the equipment supplied or noted otherwise, the Electrical Contractor shall provide disconnect switches, motor starters and variable frequency drives as required by code and/or as shown on the drawings. The contractors responsible for installing the associated equipment shall coordinate with the Electrical Contractor to ensure devices of the proper size are furnished. Further, the other trades shall furnish all electric control items needed to the Electrical Contractor for installation and connection.

The contractor shall provide openings and chases, cutting and patching, excavation and backfilling and pipe sleeves as needed for proper execution of the work.

The Contractor shall do all excavation and backfilling necessary to complete work under this contract. Trenches close to walls and columns of the building shall not be excavated without the Architect and/or Structural Engineer's prior consent. As a minimum, backfill in 6" lifts, compacting to a minimum of 90%. The first 12" of fill above any buried item outside the building shall be sand in order to contrast with other fill material. Provide a yellow warning tape at the top of the sand layer.

Sleeves are required in all penetrations through new exterior walls, masonry walls, floors and fire rated gypsum board walls. Sleeves shall be either Schedule 5 steel pipe, EMT conduit, field fabricated from minimum 16 gauge steel with 2" overlap at the seam, or as required by UL listed fire-stopping system. Sleeves will not be required in existing wall penetrations of masonry construction when such openings are made by "core-drilling." Space between sleeves and pipe in exterior walls shall be sealed using link seals. Space between sleeves and pipe in other wall construction shall be the diameter necessary to provide the clearance required by the UL listed fire stopping method chosen by the contractor.

All sidewalks, streets, or alley surfaces that are broken in connection with this contract shall be patched to the satisfaction of the owner.

Provide fire stopping to maintain the fire rating of walls, floors, ceilings or other building component. Fire stopping shall be composed of compatible components, the substrates forming openings and the items penetrating the fire stopping, as demonstrated by the fire stopping manufacturer based on testing and field experience. Firestop system installation must meet requirements of ASTM E-814, UL Standard 1479 or UL Standard 2079 tested assemblies that provide a fire rating equal to that of construction being penetrated.

MECHANICAL

Outdoor Conditions:
Summer 96°F DB 77°F WB
Winter -10°F DB

Indoor Conditions: Summer Winter
General Indoor Spaces 75°F DB 70°F
Machine Rooms 85°F 55°F

Outside Air Ventilation Rates: Outside air ventilation rates will be in accordance with the International Codes and ASHRAE standard 62 "Ventilation for Acceptable Indoor Air Quality".

Exhaust Rates: Parking Garage 0.75 CFM per square foot

General HVAC Scope: Existing parking garage exhaust fans shall be replaced with new, providing transition curbs as needed to maintain waterproofing at curb. Existing in-line fan serving electrical vault below shall be replaced. Existing fans previously serving paint booth shall be removed and existing curbs capped. New balance grilles shall be added at exhaust intakes to allow balancing of system per floor. Existing exhaust grilles may be cleaned, painted and reused, or replaced at the contractor's option. Existing make-up air louvers shall be reused, cleaned and painted, with existing backdraft dampers to be replaced. Provide new heating/cooling units to serve elevator machine room and attendant station. Provide new electric heaters in stairwells. Provide exhaust fan and hoistway vent to serve elevator hoistway, if required by elevator scope of work.

Provide all equipment as shown or noted on the plans. Provide all accessories, controls or other items as necessary for complete and operating systems. All equipment shall be labeled, bearing designation as shown on the drawings. Labels shall be engraved, white on black laminated plastic plates.

All temporary valves, dampers, disconnects, etc. not indicated, but required by phasing, shall be included in the base bid.

Provide flexible connections for all duct systems at fan or unit connections.

Set floor-mounted air equipment with rotating parts on 3" x 3" x 2" neoprene isolator pads.

All ductwork sizes shown on the drawings represent free area. Adjust sheetmetal sizes accordingly to accommodate insulation.

All rectangular outdoor air intake ducts, mixed air ducts, return air ducts, boots/transfers, and low pressure supply ducts, shall be lined with Certain-Teed, ToughGuard 2, type 200, 2.0 pcf, 1/2" thick with K=0.25 based on 75° F mean temperature and an NRC of 0.45. Liner shall be installed according to the latest SMACNA duct liner application standard.

Provide all sheet metal work as specified and indicated on the drawings. All duct construction, gauges, methods of construction, and methods for hanging and supporting shall conform to SMACNA "HVAC Duct Construction Standards" and all applicable codes.

Drain lines shall be graded at 1/8" per foot. All drains shall be provided with a trap of proper depth in accordance with prevailing system static pressures.

All piping shall be concealed in walls, below floors or above ceilings unless indicated otherwise or shown running through areas with exposed structure. Pipe shall be installed parallel or perpendicular to building surfaces.

Before testing begins, the contractor shall: clean ductwork, coils, fans, etc. in the air system to remove all construction dust and debris; provide new air filters; start, lubricate and balance all fans; lubricate all motors and bearings; check belt tension; check motor rotation; clean all strainers; verify water has been treated and cleaned; set automatic fill valves for required system pressure; check expansion tanks to determine that they are not air bound and that the system is completely full of water; check air vents at high points of systems and determine if all are installed and operating freely (automatic type) or bleed air completely (manual type); check operation of automatic bypass valves; check and set operating temperatures of chillers to design requirements.

The contractor shall procure the services of a balancing and testing agency which will balance in compliance with the National Environmental Balancing Bureau. Air and water flows shall be balanced to within plus or minus 10% of design requirements. The final report shall be submitted to the Engineer for review. Piping systems shall be pressure tested at a minimum of twice the expected system capacity or a maximum of the pressure rating of the system components.

During testing and balancing, the contractor shall change or adjust pulleys as required to provide proper fan operation.

PLUMBING

General Plumbing Scope: All existing storm drainage piping to be reused, with a complete water jet cleaning of entire system. Drains and grates shall be cleaned, and replaced where damaged. Natural gas piping shall be extended from service line, up to elevator machine room to serve new heating unit. Existing utility services to building shall be reused, unless noted otherwise.

Provide unions or grooved mechanical couplings at all equipment connections, at points where disconnection of piping will be required and at other locations indicated on the drawings.

Pipe hangers for lines ½" to 2" shall be adjustable swivel ring. Pipe hangers for lines 2 ½" to 4" shall be light duty clevis. Pipe hangers for lines 6" and larger shall be standard clevis. Provide hanger rods in diameters as required by the hanger rod holes. Provide riser clamps at each floor and at other locations where vertical support is necessary.

All fittings and joints in gas piping shall be soap tested while holding a 50-psi air pressure.

All piping shall be concealed in walls, below floors or above ceilings unless indicated otherwise or shown running through areas with exposed structure. All pipe shall be installed parallel or perpendicular to building surfaces.

Natural gas piping above grade shall be schedule 40 black steel pipe with either welded or threaded malleable fittings. Flexible gas piping in maximum 24" lengths shall be used at final connections to all gas appliances.

Provide a union, gas valve and scale pocket at each equipment connection.

Schedule 40 PVC drain waste and vent piping with solvent welded joints shall be used for all soil, waste, storm and vents lines located below grade.

Cast iron soil pipe with no hub joints shall be used for soil, waste, storm, and vent lines above grade. Couplings for joining hubless cast iron pipe and fittings conforming to ASTM Q-888, shall be 3 inches wide for nominal pipe sizes 1 ½ to 4 inches in diameter, 4 inches wide for nominal sizes 5 to 10 inch diameter, and 5 5/8 inches wide for couplings 12 and 15 inches in diameter. Shields shall have a minimum thickness of .015 inches, (28 gage) type 304 stainless steel. Worm drive clamps shall be type 304 stainless steel with a minimum clamp torque of 80 in/lbs. Sealing gasket shall be neoprene conforming to ASTM C-564.

The arrangement of waste and vent systems must be as direct as possible avoiding all unnecessary offsets. All pipe shall run as indicated on the drawings, unless some condition should arise which would make it necessary or seem advisable to alter same. Horizontal lines shall be graded at 1/8" per foot, unless noted otherwise. Where necessary, lines may pitch at 1/10" per foot when approved or noted.

Provide cleanouts where shown or required by code. Cleanouts shall be the same size pipe for pipe 4" and smaller, and 4" for lines 4" and larger.

Bid Alternate: As a bid alternate, provide pricing to include a sand/oil interceptor to serve all existing interior drains. Interceptor shall be tied into existing drain lines before exiting building. As part of bid alternate, existing roof drains shall be replaced, and piped through an independent system to below the parking garage level, and tied into the primary system downstream of new sand/oil interceptor. Vertical leaders shall be sized at 8", and horizontal combined main shall be 12".

FIRE PROTECTION

General Plumbing Scope: Entire dry pipe sprinkler system to be replaced, with new code compliant backflow prevention and assembly, and new dry system valves and risers. Deck levels may reuse existing zoning, or may be rezoned to allow for more efficient pipe routing. Provide new standpipes in stairs, and up to roof deck as required. Garage level piping may be from standpipe system where allowable per code, but all fire alarm requirements must be coordinated with and covered by fire alarm sub-contractor. Existing 10" utility service to building shall be reused, unless noted otherwise.

Building shall be "fully sprinklered" as defined by NFPA. Provide fire protection system complete, per applicable codes, per NFPA and per requirements of authorities having jurisdiction.
Include all piping, offsets, fittings, drains, valves, supports, heads, etc. as required for a complete operable system.

Provide and install backflow prevention equipment as required by local codes. Provide and install full flow fire meter or detector check meter if required.

Provide a brass Fire Department Connection, with hose threads complying with local Fire Department Standards. Provide check valve, ball drip assembly, pipe to drain or discharge onto grade.

Pipe hangers for lines 1/2" to 2" shall be adjustable swivel ring hanger equal to B Line Figure B 3170NF. Pipe hangers for lines 2 1/2" to 4" shall be light duty clevis hanger equal to B Line Figure B 3104.
Water mains shall be PVC (ASTM D 1784), AWWA C-900, Class 150, DR18, UL and NSF listed with "Ring-tite", ASTM D 3139 and ASTM F 477 joints.

Schedule 40 grade, ASTM A-53, black steel pipe shall be used for all Fire Protection Piping. Victaulic UL listed and FMG approved fittings and couplings shall be used for all joints and fittings. Schedule 10 black steel pipe shall be permitted in lieu of Schedule 40 steel pipe to meet NFPA, 13 requirements, however joining methods will be strictly limited to Victaulic couplings and fittings. The use of threaded lightwall piping (Allied XL), and the use of lightwall materials, is strictly prohibited.

Piping systems shall incorporate all necessary facilities for testing and draining the system. Provide auxiliary system drains for portions of the system that may be trapped. System test drain shall be installed at an accessible location and shall discharge onto grade or other approved location.

Sprinkler heads shall be Central Sprinkler. Equivalent sprinkler heads by Viking, Star, Grinnell or Reliable are acceptable for the heads specified. Head temperature ratings shall be 165°F unless otherwise specified. Sprinkler heads in elevator shafts and elevator machine rooms shall be 212°F temperature activated.

All valves in the sprinkler system shall be provided with supervisory switches. Switches shall be connected to the building fire alarm and shall alarm when a valve is not in its normal operating position.

Provide water flow alarm apparatus for the system. Alarm device shall be a listed alarm check valve with all necessary attachments required. Flow alarm devices shall be installed per NFPA requirements.

Provide flow switches as indicated on the drawings and as required by NFPA.

Design and install a complete automatic sprinkler system for fire protection. All elements and components of the system shall be in compliance with NFPA Pamphlet 13, "Standard for the Installation of Sprinkler Systems". Components shall be listed in current Underwriters Laboratories "Fire Protection Equipment List". Final acceptance shall be based on submission of test certificates, and completion of all regulatory body recommendations submitted following their final inspection.

Coordinate all scheduling and work with other trades to prevent conflicts and to ensure orderly progress of the work with a minimum of delays. Where sprinkler piping is installed without coordinating with other trades and conflicts occur, sprinkler piping shall be relocated as required at no additional cost to the owner.

Where piping passes through walls, floors, ceilings or other building construction, sleeves must be used.

Seal all exterior floor, wall and roof penetrations water and weather tight.

Size sprinkler piping by hydraulic calculations in accordance with NFPA Standard 13, Chapter 7. Hydraulic calculations shall include hose requirements. Hose requirements shall be inserted at the locations in the system per NFPA. Pipe sizing shall provide an allowance of 10 psig in excess of base requirements.

Provide the final design and layout and hydraulic calculations required for the approval of the fire protection systems in accordance with requirements of the insurance interest having jurisdiction, state and local codes. Velocity pressure shall not be considered in the hydraulic calculations.

Submittals shall be provided showing detailed fire protection drawings and hydraulic calculations per NFPA-13 requirements including complete sprinkler system layout drawings with hydraulic calculation reference points and area of application indicated.

Sprinklers shall be shown on drawings and submittals and shall be specifically identified with the applicable style or series designation as published in the appropriate agency listing or approval.
The systems shall be designed by a licensed fire protection engineer and installed by a licensed sprinkler contractor in full accordance with NFPA and all codes and standards. Shop drawings, layout and design shall be approved by the Local Authority Having Jurisdiction and the Engineer prior to installation.

ELECTRICAL

General Electrical Scope: Remove and replace all lighting within garage, along with branch circuits serving lighting. Lighting replacement shall include replacement of all emergency and exit signage. Test power to all wayfinding signs not currently illuminated. Verify viability of all circuits serving new HVAC equipment, and reuse where feasible. Provide new circuits to electric heating units in stairwells. Provide any new electrical infrastructure required to serve elevator hoistway equipment, and inside hoistway itself to ensure code compliance.

All lighting shall be LED type, with a CCT of 4000K, and a minimum CRI of 80. All light levels shall be laid out to meet IES minimum guidelines for the spaces being served. Automatic controls shall be provided for all fixtures.

The Electrical Contractor shall provide all conduit and wiring and shall connect complete and ready for operation all electrical motors and equipment for other trades as shown on the drawings and as required for complete and operating systems.

The contractor shall pay any and all required utility service fees associated with this project direct to the local utility company.

Provide wire as specified and circuiting as shown on the drawings. Power wires and cables shall be code type THWN or THHN and minimum #12 AWG, unless noted otherwise. Power wires and cables #10 AWG and smaller shall be annealed soft copper, solid construction. All power wires and cables #8 AWG and larger shall be annealed soft copper, compressed strand construction.

At the contractor's option, wires and cables #6 and larger may be Alcan "Stabiloy", or Southwire "Triple E" with Code type XHHW-2 insulation. Cables shall be marked "Al Stabiloy 600V XHHW-2 (UL)" or "Al Triple E 600V XHHW-2". Note that wire and conduit sizes indicated on plans are based on copper. If aluminum conductors are used, it is the responsibility of the contractor to size the conductors and conduit meeting NEC requirements. All circuits feeding mechanical equipment are sized based on copper wires, and shall be installed using copper feeders only.

Color coding for 120/208 volt systems shall be Black/Blue/Red for phase conductors, White for neutral and green for grounding conductors. Color coding for 277/480 volt systems shall be Brown/Orange/Yellow for phase conductors, Grey/White for neutral and green for grounding conductors.

Interior conduit shall be EMT. Provide setscrew couplings and fittings for NEMA 1 installations and compression couplings and fittings for NEMA 3R installations as a minimum. All conduit shall be run parallel or perpendicular to the building surfaces. Conduit shall be concealed in walls. Overhead conduit shall be concealed except in rooms without ceilings. At the Contractor's option interior branch circuits may be type MC cable with listed fittings and couplers in lieu of EMT conduit and conductors. Homeruns to panels will be made with EMT conduit (no MC connections to panel cans). Color coding shall be maintained.

All power wires and cables shall be minimum #12 AWG, unless noted otherwise. Wire shall be Code Type THWN or THHN, unless noted otherwise.

Each 120 volt outlet circuit shall be provided with dedicated neutral conductors. Three phase, four wire homeruns of 120 volt branch circuits will not be accepted.

Provide conduits and raceways; electrical pull, junction and device boxes as specified and shown on the drawings, as well as those required for a complete and code acceptable installation.

(Bid Alternate Only) 120/208 Volt Panelboards: Provide Square D, type NQ, 3 phase, 4-wire panelboards with circuit breakers as scheduled. Circuit breakers shall be bolt-on thermal-magnetic molded case type. Arc Fault breakers shall be provided for all circuits as required in section 210.12 of the NEC.

(Bid Alternate Only) 277/480 Volt Panelboards: Provide the following Square D type NF, 3 phase, 4-wire panelboards with circuit breakers as scheduled. Circuit breakers shall be bolt-on thermal magnetic, molded case type.

(Bid Alternate Only) Circuit Breaker Distribution Panels: Provide Square D, I-Line, 3 phase, 4-wire panelboards with circuit breakers as scheduled. Provide panels with ground bars, surface mounted cabinets and UL label. Circuit breakers shall be Square D, Type KA and FH thermal-magnetic, molded case circuit breakers.

Inside each panel door, provide an approved typewritten schedule card showing what each circuit feeds.

Provide engraved, white on black, laminated plastic plate, mechanically affixed labels on all panels, transformers, safety switches, motor starter, etc. Where panels, etc., occur in finished rooms, label shall be on inside of the door. Labels shall match designation indicated on the plans.

Provide 20 amp, heavy duty commercial wiring devices as required. Device and coverplate colors shall be as directed by the architect. Coverplates shall be stainless steel OR nylon. Ground fault interrupter receptacles shall be provided in all locations as required in Section 210.8 of the latest adopted version of the NEC. Weather resistant receptacles shall be provided in all locations as required in Section 406.9 of the latest adopted version of the NEC with extra duty weatherproof in-use cover.

Provide heavy-duty safety switches as indicated on the plans and as specified. Provide the appropriate NEMA enclosure rating for the installation location. All safety switches shall be NEMA Type HD and UL listed. Provide fusible devices as shown on the drawings.

Provide heavy duty magnetic motor starter, and manual motor controllers as indicated on the plans and as specified. Provide the appropriate NEMA enclosure rating for the installation location. All motor starters shall be NEMA rated and UL listed. Controllers shall be furnished within dedicated enclosures, or as combination/disconnect controllers as indicated on the plans. Provide auxiliary contacts and other accessories as needed for proper control as directed by other trades.

Provide light fixtures as required. Material, equipment or services necessary to complete the installation of these fixtures, but not specifically mentioned shall be furnished as though specified.

Properly support and align all fixtures and provide all necessary steel shapes for support of the fixtures. Fixtures recessed in ceilings shall be securely connected to the ceiling. For fixtures weighing less than 56 pounds, provide a minimum of two (2) 12 gauge wires which are connected to the structure above. Fixtures weighing more than 56 pounds shall be supported directly from the structure above.

Verify all ceiling systems and coordinate fixture type and accessories prior to ordering fixtures. Coordinate and cooperate with ceiling installer in regards to the location and installation of light fixtures.

Bid Alternate: As a bid alternate, provide pricing to replace all panelboards and feeders within garage with new, back to distribution equipment. As a bid alternate, provide pricing to repair air-cooled condensing units and replace refrigerant serving generator cooling system, as required to bring units back into full working order.

BROWNING
DAY MULLINS
DIERDORF
LEADERSHIP + DESIGN®

Browning Day Mullins Dierdorf Architects
Architecture
Landscape Architecture
Planning
Interior Design

626 North Illinois Street
Indianapolis, Indiana 46204
Phone: (317) 635-5030
Website: www.bdmd.com

Delta Quad Holdings, LLC
Owner

Rau Construction Co.
Construction Manager

9101 West 110th Street, Suite 150
Overland Park, Kansas 66210
Phone: (913) 642-6000
Website: www.website.com

Lawson Elser, Inc.
Structural Engineer

650 East Carmel Drive, Suite 150
Carmel, Indiana 46032
Phone: (317) 574-5409
Website: www.lawsonelser.com

Hoss & Brown Engineers, Inc.
MEP Engineer

11205 West 79th Street, Suite 102
Lenexa, Kansas 66214
Phone: (913) 362-9090
Website: www.h-be.com

SK Design Group, Inc.
Civil Engineer

4600 College Boulevard, Suite 100
Overland Park, KS 66211
Phone: (913) 451-1818
Website: www.skdesigngroup.net

Matchline Design Group, LLC
Interior Design

10300 North Central Expressway, Suite 335
Dallas, TX 75231
Phone: (972) 707-0568
Website: www.matchlinedesign.com

GREGORY E. JACOBS
REGISTERED
No. AR00000208
STATE OF INDIANA
ARCHITECT

CERTIFICATION

Construction Documents
Garage Maintenance

The Grand Reserve

925 Grand Boulevard
Kansas City, MO 64198

Project No.: 18A023
Drawn By: Author
Checked By: Checker
Scale: See Drawing
Issue Date: May 3, 2019

REVISION SCHEDULE		
Rev. #	Revision Description	Issue Date

Garage - MEPFP Scope Narrative

MEP0.1G